ORDER NO. AD9702022C2

Service Manual

Amplifier

Amplifier

SE-HD60

System: SC-HD60

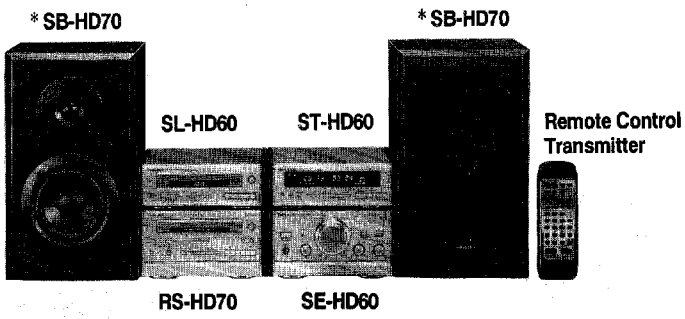

Colour
(N) ..... Gold

Area
(E) ..... Europe.
(EG) ..... Germany and Italy.

Because of unique interconnecting cables, when a compact requires service, send or bring in the entire system.

Specifications

Amplifier Section

Power output
DIN 1 kHz, THD 1 %, both channel driven: 2 × 45 W (6 ohm)
RMS 1 kHz, THD 10 %, both channel driven: 2 × 60 W (6 ohm)
Total harmonic distortion
Rated power at 1 kHz: 1 % (6 ohm)
Half power at 1 kHz: 0.09 % (6 ohm)
Load impedance: 6 ohm
S/N (rated power): 90 dB

General

Power consumption: 100 W
Power supply
[for (E,EG) area]: 230 V, AC 50Hz
Dimensions: 196(W)/103(H)/255(D) mm
Weight: 4.1 kg

Notes:
1. Specifications are subject to change without notice.
2. Weight and dimensions are approximate.
3. Total harmonic distortion is measured by the digital specrum analyzer.

System/SC-HD60:
Tuner: ST-HD60, Compact Disc Player: SL-HD60, **Amplifier: SE-HD60**, Cassette Deck: RS-HD70, Speakers: SB-HD70

Notes: * ..... Made in PAES

⚠WARNING
This service information is designed for experienced repair technicians only and is not designed for use by the general public. It does not contain warnings or cautions to advise non-technical individuals of potential dangers in attempting to service a product.
Products powered by electricity should be serviced or repaired only by experienced professional technicians. Any attempt to service or repair the product or products dealt with in this service information by anyone else could result in serious injury or death.

Technics®

© 1997 Matsushita Electric Industrial Co., Ltd.
All rights reserved. Unauthorized copying and distribution is a violation of law.

■ Contents

	Page
Accessories	2
Before Repair	3
Protection Circuitry	3
Location of Controls	3
Installation	4
Connections	5, 6
Changing the Tone	7
Convenient Functions	7
Operation Checks and Main Component Replacement Procedures	8 ~ 10
Wiring Connection Diagram	10
To Supply Power Source	11
Type Illustration of ICs, Transistors and Diodes	11
Schematic Diagram	12 ~ 17
Printed Circuit Board Diagram	18 ~ 20
Block Diagram	21, 22
Replacement Parts List (Electrical)	23, 24
Resistors and Capacitors	25, 26
Replacement Parts List (Cabinet, Packing and Accessories)	27
Cabinet Parts Location	28
Packaging	29

■ Accessories

- AC power supply cord ..... 1 pc.
  (RJA0019-2K)

- Remote control transmitter ..... 1 pc.
  (RAK-CH193WH)

- Speaker cords ..... 2 pcs.
  (RFA0737-R)

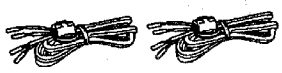

- Remote control batteries ..... 2 pcs.
  (UM-4, "AAA", R03)
  Note: These are available on sales route.

- AM loop antenna set (RSA0021)
  AM loop antenna ..... 1 pc.
  Antenna holder with stand ..... 1 pc.
  Antenna holder without stand ..... 1 pc.
  Screw ..... 1 pc.

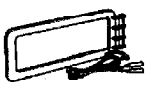

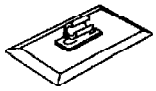

- FM indoor antenna ..... 1 pc.
  (RSA0007)

- Flat cable (short) ..... 1 pc.
  (REX0608)

- Flat cable (Long thick) ..... 1 pc.
  (REX0812)

- Flat cable (Long thin) ..... 1 pc.
  (REX0813)

■ Before Repair

(1) Turn off the power supply. Using a 10 Ω, 10 W resistor, connect both ends of power supply capacitors (C715 ~ C718) in order to discharge the voltage.

(2) Before turning the power supply on, after completion of repair, slowly apply the primary voltage by using a power supply voltage controller to make sure that the consumed current at 50 Hz in NO SIGNAL mode should be shown below with respect to supply voltage 230 V.

Area	(E) (EG)
Power supply voltage	AC 230 V
Consumed current 50 Hz	60 ~ 180 mA

■ Protection Circuitry

The protection circuitry may have operated if either of the following conditions is noticed:

* No sound is heard when the power is switched ON.
* Sound stops during a performance.

The functions of this circuitry is to prevent circuitry damage if, for example, the positive and negative speaker connection wires are "shorted", or if speaker systems with an impedance less than the indicated rated impedance of this unit are used.

If this occurs, follow the procedure outlined below:

1. Switch OFF the power.
2. Determine the cause of the problem and correct it.
3. Switch ON the power once again.

Note:

When the protection circuitry functions, the unit will not operate unless the power is first switched OFF and then ON again.

■ Location of Controls

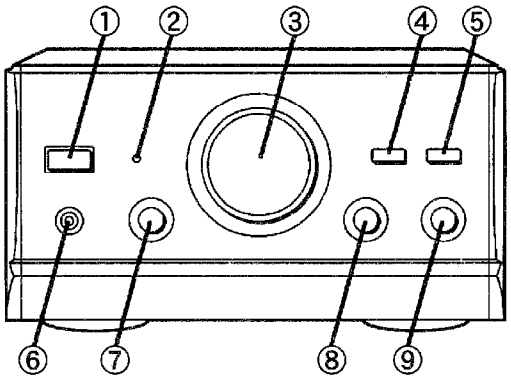

① **Power "STANDBY ⏻/ON" switch (POWER, STANDBY ⏻/ON)**
Press to switch the unit from on to standby mode or vice versa. In standby mode, the unit is still consuming a small amount of power.

② **Standby indicator (STANDBY)**
When the unit is connected to the AC mains supply, this indicator lights up in standby mode and goes out when the unit is terned on.

③ **Volume control (VOLUME)**

④ **Source direct button (SOURCE DIRECT)**

⑤ **Vocal presence button (VOCAL PRESENCE)**

⑥ **Headphones jack (PHONES)**

⑦ **Balance control (BALANCE)**

⑧ **Bass control (BASS)**

⑨ **Treble control (TREBLE)**

Installation

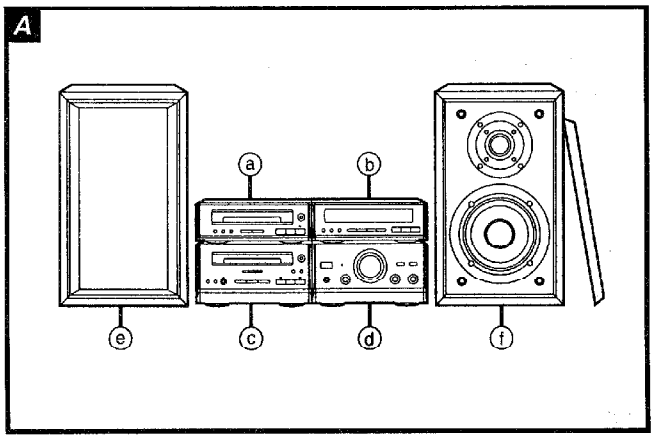

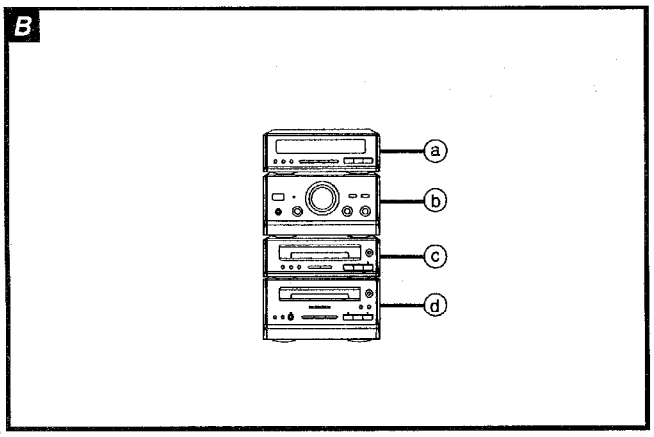

Locating the components

Side-by-side set-up A

ⓐ CD player
ⓑ Tuner
ⓒ Cassette deck
ⓓ Amplifier
ⓔ Left speaker
ⓕ Right speaker

Stacking B

ⓐ CD player
ⓑ Tuner
ⓒ Cassette deck
ⓓ Amplifier

Caution:
Use the speakers only with the recommanded system. Failure to do so many lead to the amplifier and/or the speakers, and may result in the risk of fire.
Consult a qualified service person if damage has occured or if you experience a sudden in performance.

Note

Left and right speakers are exactly the same.

■ Connections

Connect the AC mains lead after you have connected all other cables.

To prepare the AM loop antenna wire and speaker cords, twist the vinyl cover tip and pull off.

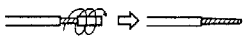

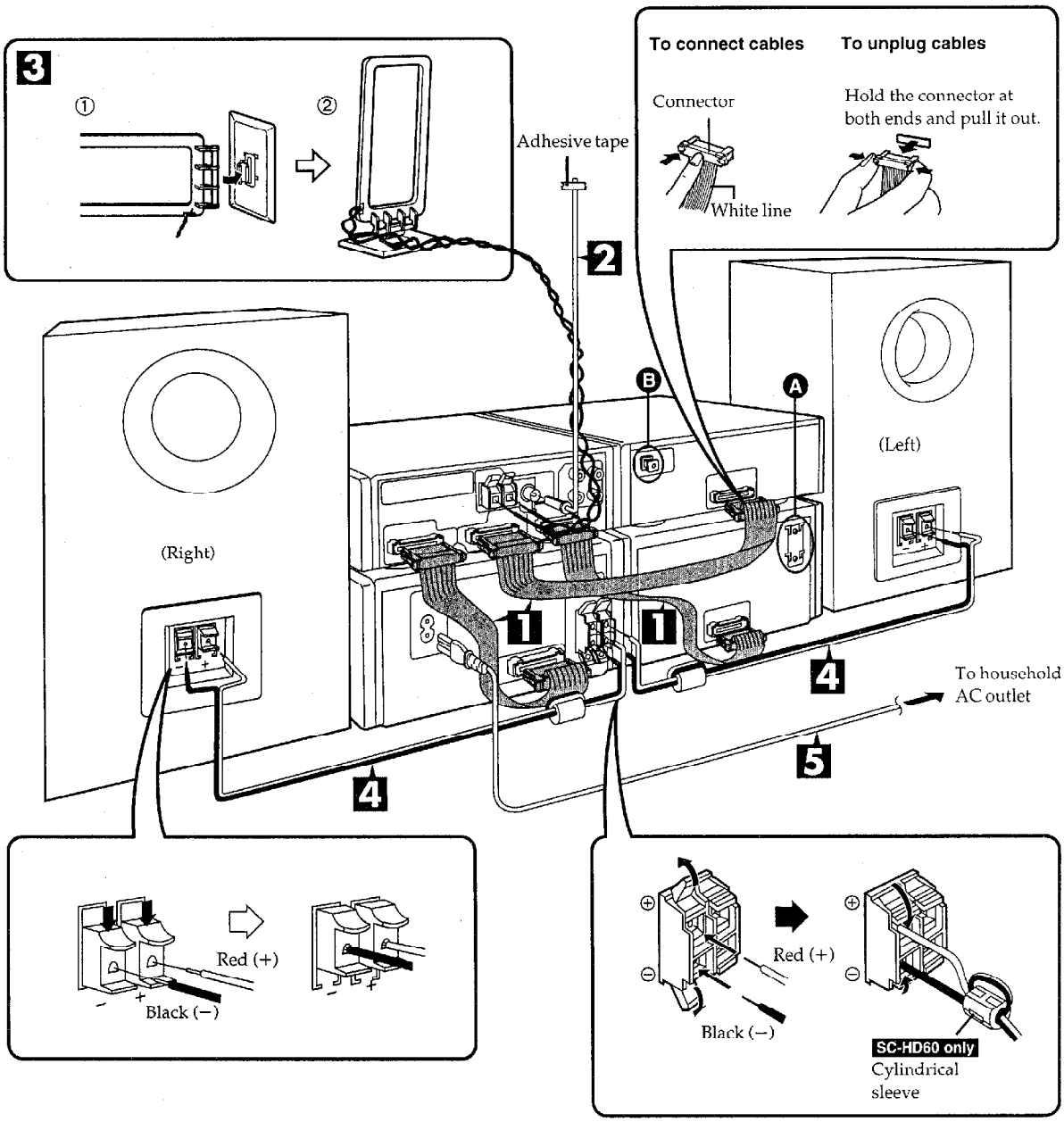

1 Connect the flat cables.

1. Connect the short flat cable between the terminals A1 and A2.
2. Connect the long thick flat cable between the terminals B1 and B2.
3. Connect the long thin flat cable between the terminals C1 and C2.

Note

Do not try connecting or disconnecting the flat cables while the power is switched to ON.

After connection:

Keep cables as flat against the back of the unit as possible.

2 Connect the FM indoor antenna.

Tape the antenna to a wall or column, in a position where radio signals are received with the least amount of interference.

Note

When you cannot get a good reception with this FM indoor antenna, we recommend you install an FM outdoor antenna (not included).

3 Connect the AM loop antenna.

You can also install the AM loop antenna on the rear of the cassette deck, wall or pillars.
In this case, be sure to use the antenna holder with the hole.

•To install on the cassette deck rear (Ⓐ)

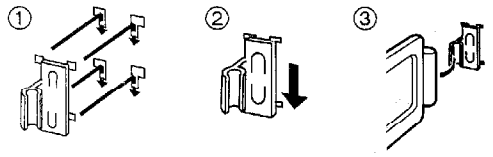

•To install on walls or pillars

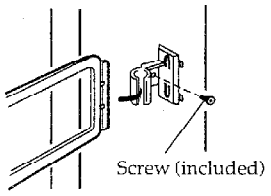

Note

To minimize noise pickup, bundle the loop antenna cord using a tape or so to keep the flat cables away from the AM loop antenna cord.

4 Connect the right (R) and left (L) front speaker cables.

Note

- For SC-HD60 connect the end of the speaker cable with the cylindrical sleeve to the amp side.
- To prevent damage to circuitry, never short-circuit positive (+) and negative (−) speaker wires.
- Be sure to connect only positive (red) wires to positive (+) terminals and negative (black) wires to negative (−) terminals.

> These speakers are made so as to be able to be used in close proximity to the TV, but irregular coloring may result due to how the system is placed. If such distortion occurs, turn off the TV for sometime between 15 and 30 minutes. The demagnetizing function of the TV will eliminate the distortion. If the irregular coloring is still visible, then move the speaker further away from the TV. Please note that if there is a magnetic object near the TV, irregular coloring may result due to the interaction between the TV and the speakers.

5 Connect the AC mains lead.

> **(United Kingdom only)**
> **BE SURE TO READ THE CAUTION FOR AC MAINS LEAD ON PAGE 4 BEFORE PROCEEDING TO STEP 5.**

Insertion of Connector

Even when the connector is perfectly inserted, depending on the type of inlet used, the front part of the connector may jut out as shown in the drawing.
However there is no problem using the unit.

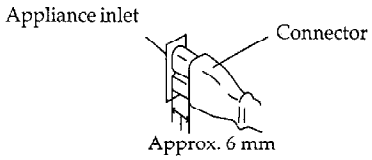

Connections to "DIGITAL OPTICAL OUT" terminal: (Ⓑ)

Before using this terminal, take out the dust protection cap.
Connect an optical-fiber cable to the optical input terminal of the DCC or minidisc deck (cables and components not included).

■ Changing the Tone

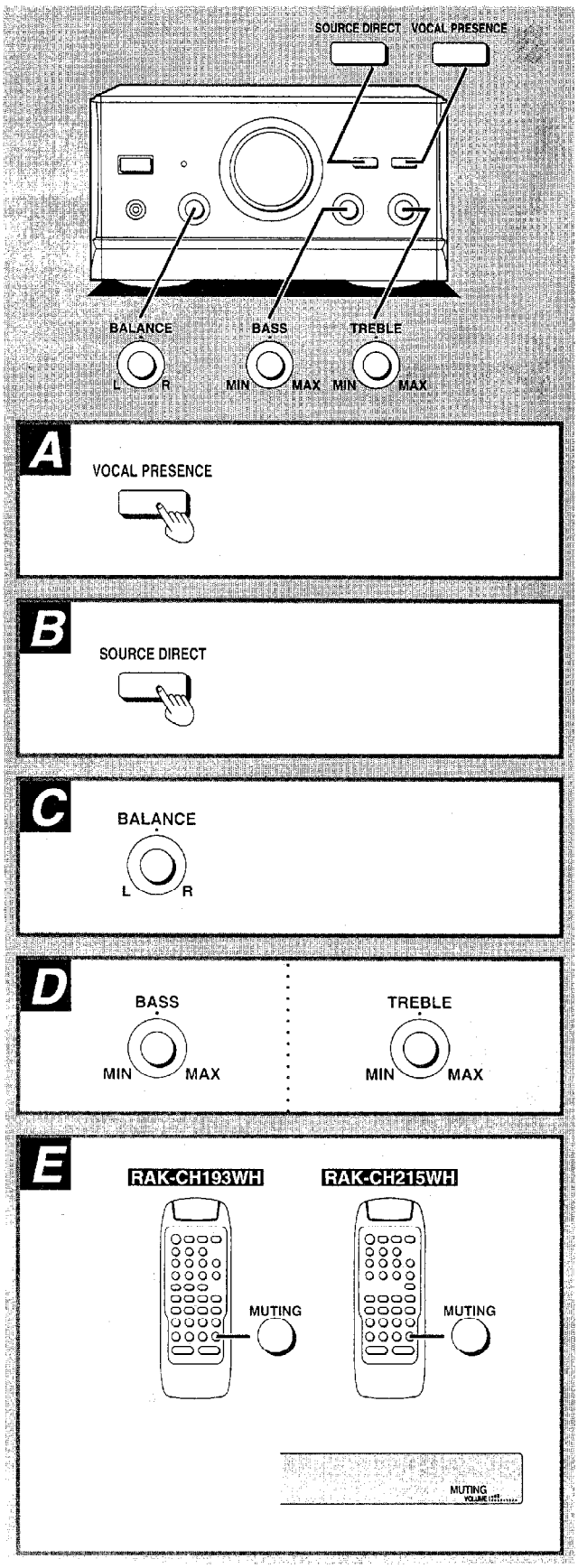

Listening with Vocal Presence

A

Press VOCAL PRESENCE.
The button will light up. Vocal Presence accentuates midrange sounds to make voices stand out. (Vocal Presence cannot be used at the same time as SOURCE DIRECT.)

To cancel
Press VOCAL PRESENCE again.

For clearer sound

B

Press SOURCE DIRECT.
The button will light up. Voice signals will not be fed through the tone control circuit, so you get a clearer sound. (You cannot adjust BASS or TREBLE when using SOURCE DIRECT.)

To cancel
Press SOURCE DIRECT again.

To adjust the sound balance

C

Turn BALANCE to adjust the left/right sound balance.

Note
The effect works only with playback. It cannot be used in recording.

To adjust the tone quality

D

Turn BASS to adjust the low-frequency sound.

Turn TREBLE to adjust the high-frequency sound.

Note
The effect works only with playback. It cannot be used in recording.

■ Convenient Functions

To mute the volume

E

This feature is convenient when you have a telephone call, etc.

by remote control only
Press MUTING.
"MUTING" will light.

To cancel, press MUTING once again. ("MUTING" goes out.)
To cancel from the amplifier, reduce the volume level to the minimum position (-- dB) and then reset to the desired volume.

For your reference:
When the system is turned off, the muting operation will be automatically canceled.

Operation Checks and Main Component Replacement Procedures

NOTE

1. **This section describes procedures for checking the operation of the major printed circuit boards and replacing the main components.**
2. **For reassembly after operation checks or replacement, reverse the respective procedures. Special reassembly procedures are described only when required.**
3. **Select items from the following Index when checks or replacement are required.**
4. **Refer the parts No. on the page of "Main Component Replacement Procedures", if necessary.**

• Contents

•Checking Procedures for each P.C.B. Page.

1. Checking for the operation P.C.B.. ..... 8.
2. Checking for the PDM P.C.B.. ..... 9.

•Main Component Replacement Procedures

1. Replacement for the regulator transistor. ..... 10.

Checking Procedure for each P.C.B.

1. Checking for the operation P.C.B.

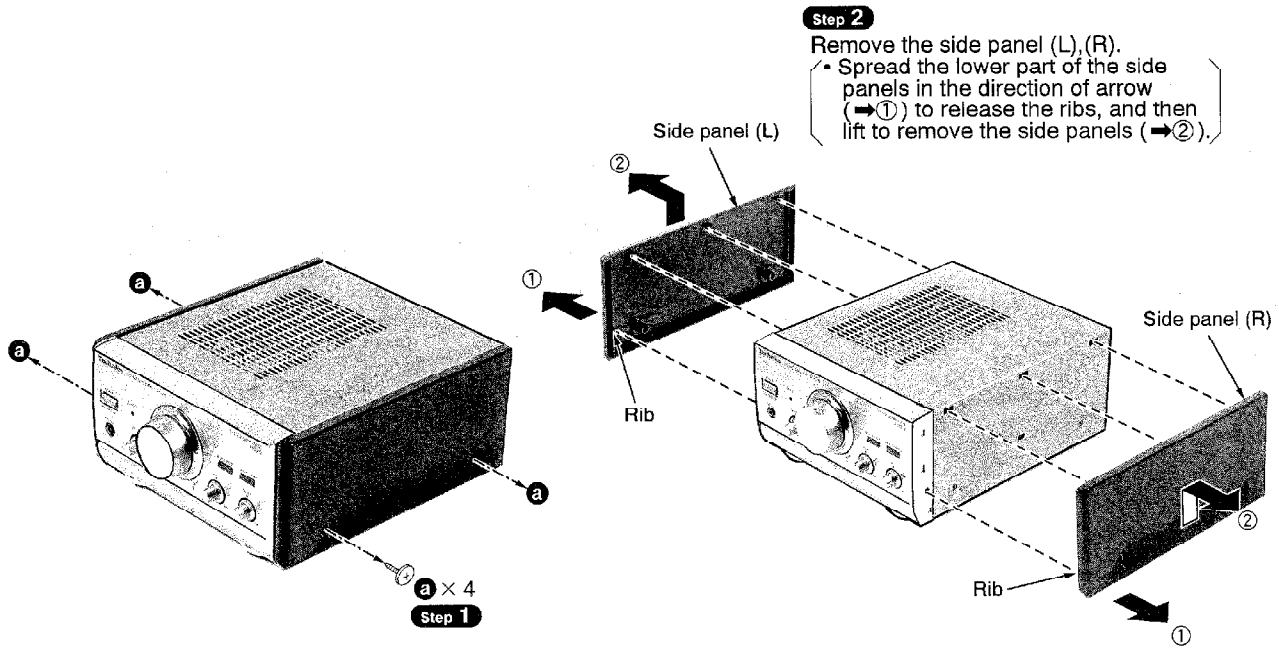

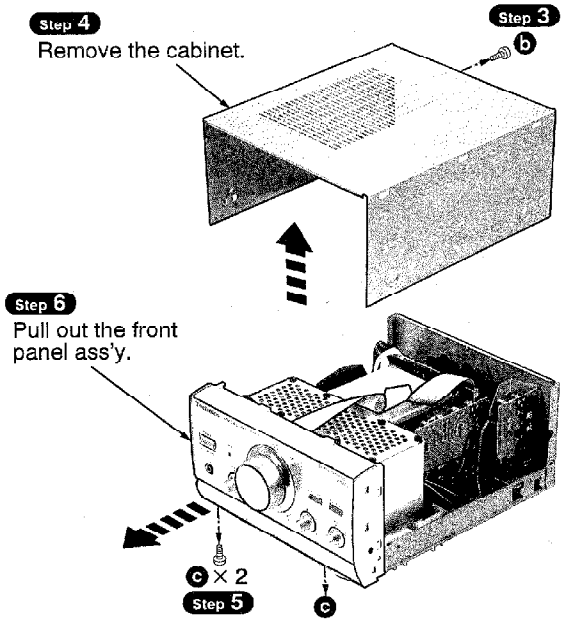

• **Check the operation P.C.B. as shown below.**

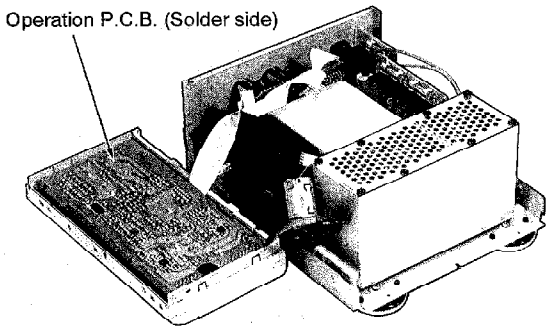

2. Checking for the PDM P.C.B.

• Follow Step 1 ~ Step 6 in item 1 on pages 8 and 9.

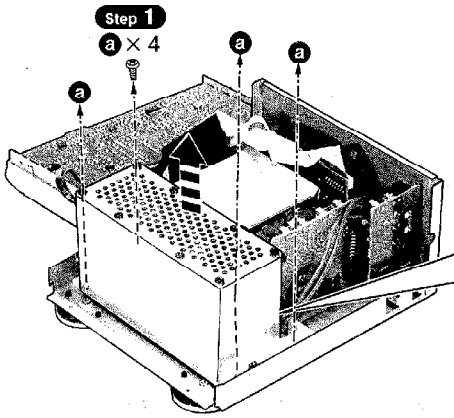

• **Check the PDM P.C.B. as shown below.**

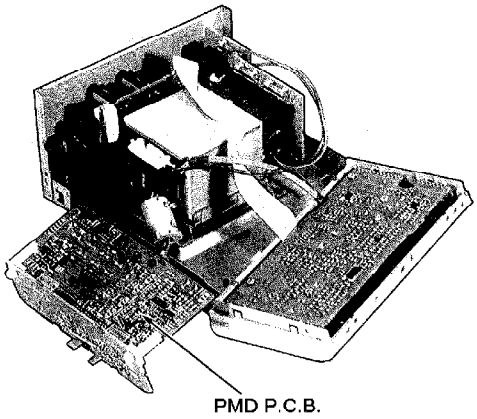

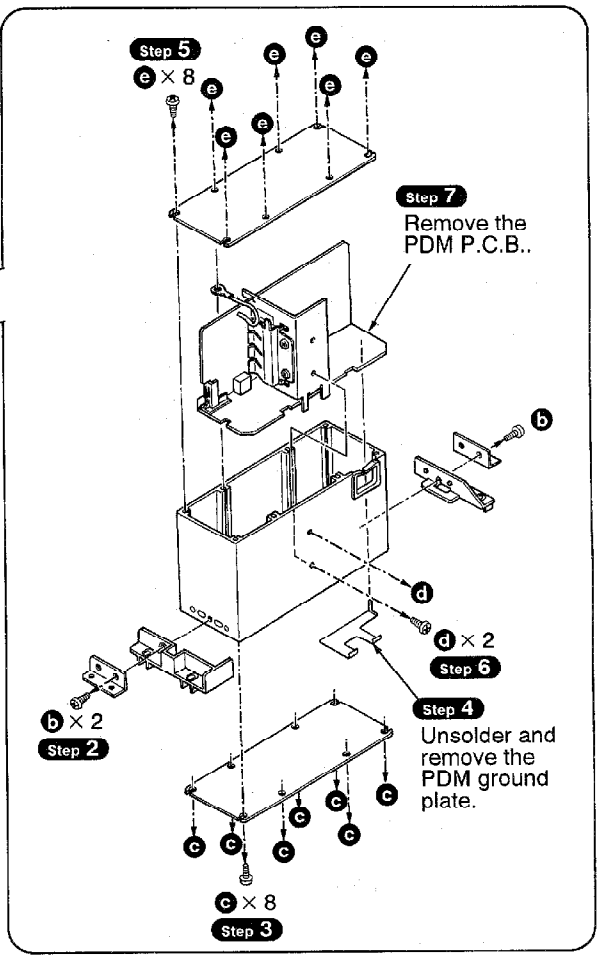

■ Main Component Replacement Procedures

1. Replacement for the regulator transistor

- Follow Step 1 ~ Step 6 in item 1 on page 8 and 9.
- Follow Step 1 ~ Step 7 in item 2 on page 9.

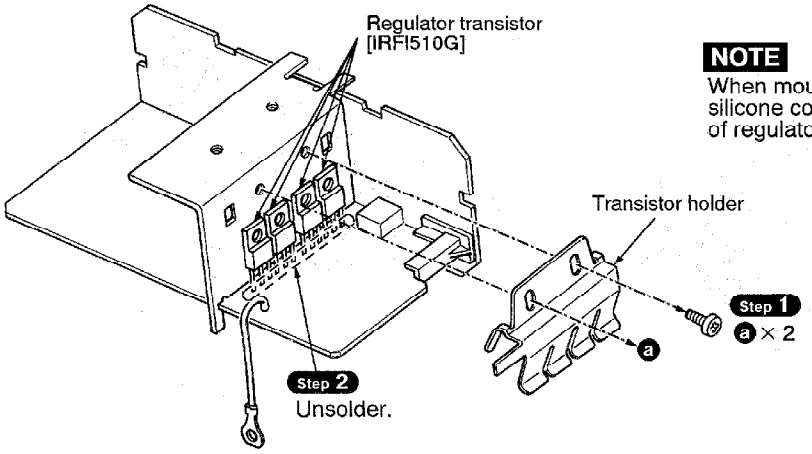

NOTE
When mounting the regulator transistor, apply silicone compound (RFKX0002) to the rear side of regulator transistor.

■ Wiring Connection Diagram

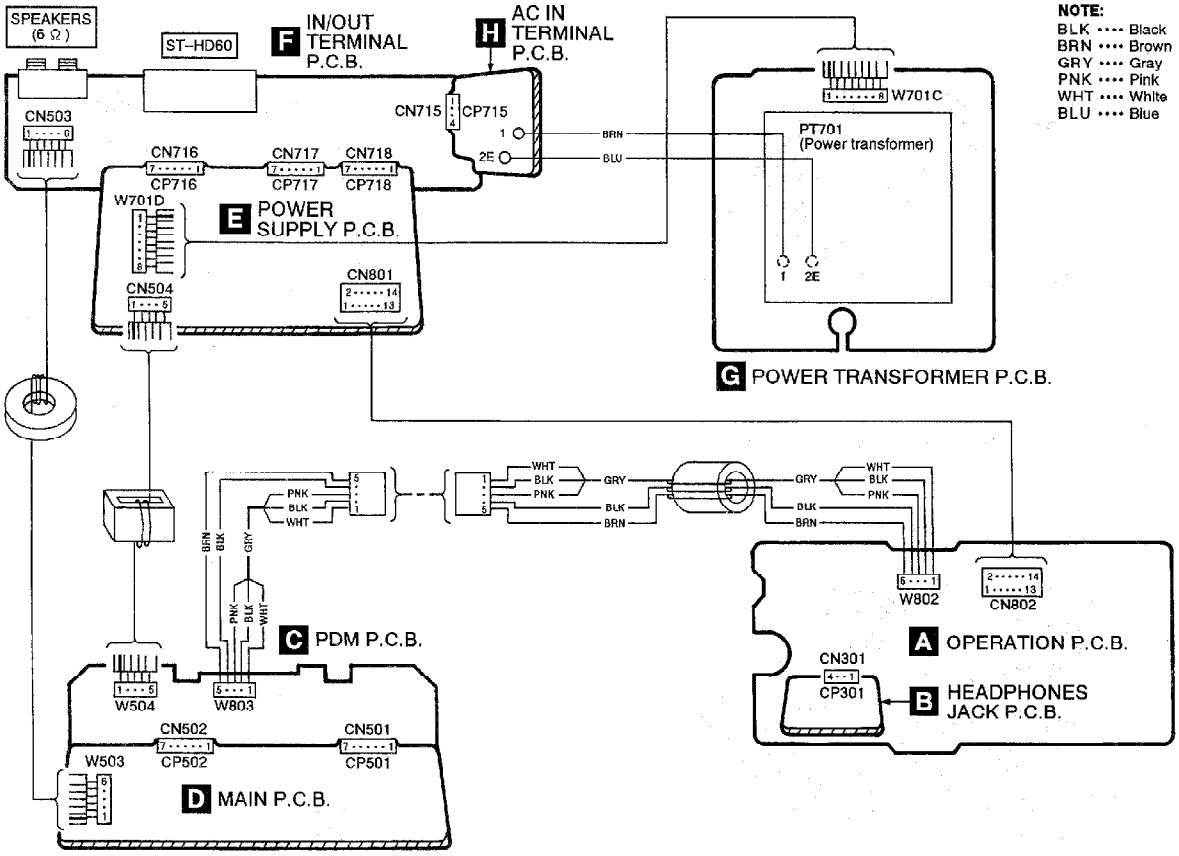

■ To Supply Power Source

This unit SE-HD60 is not operate normally without connecting the unit ST-HD60.
When operate the unit SE-HD60, be sure to connect the unit ST-HD60 with included connection cable.

1. Connect the tuner **ST-HD60** to this unit **SE-HD60**.
2. Connect the AC power supply cord.
3. Connect the speakers to speaker input terminal.
4. Press the power switch.

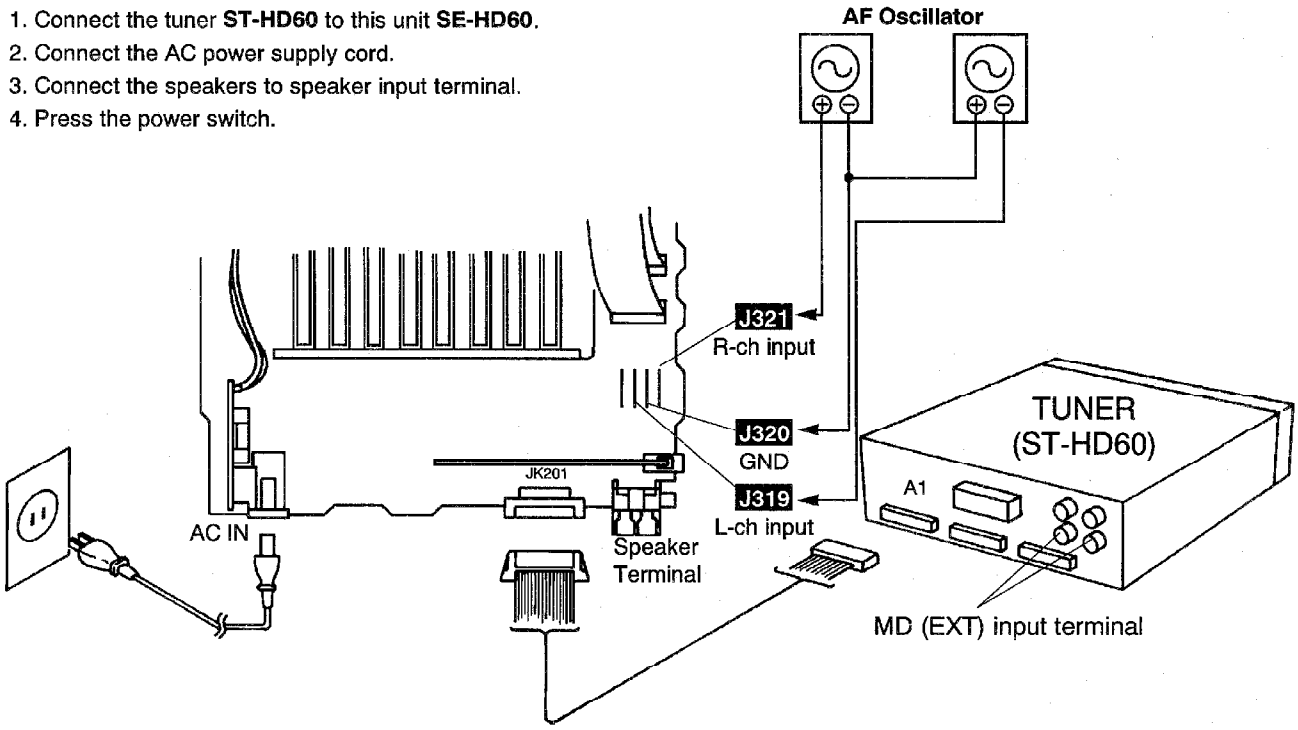

■ Type Illustration of ICs, Transistors and Diodes

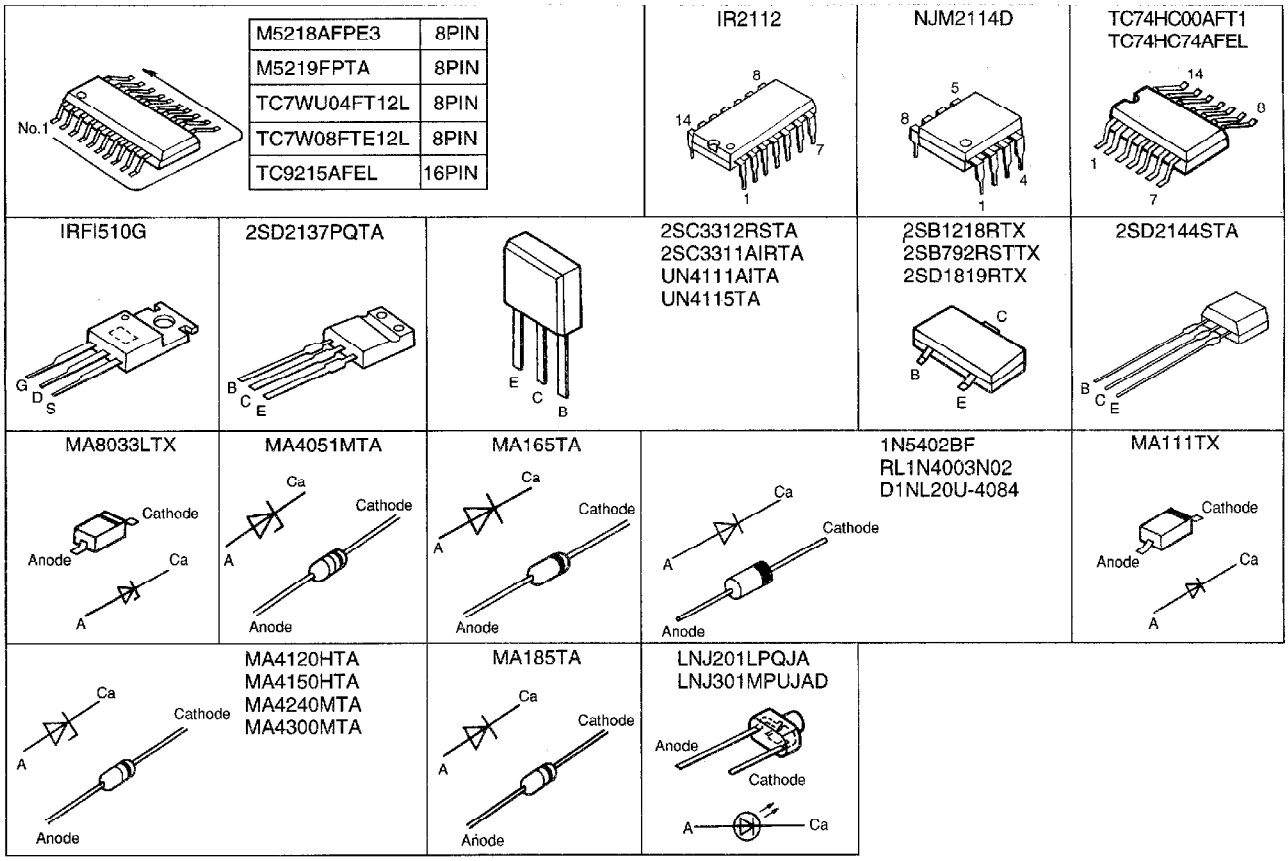

Schematic Diagram

	Page
A OPERATION CIRCUIT	13, 14
B HEADPHONES JACK CIRCUIT	13
C PDM CIRCUIT	14
D MAIN CIRCUIT	15, 16
E POWER SUPPLY CIRCUIT	17
F INPUT/OUTPUT TERMINAL CIRCUIT	17
G POWER TRANSFORMER CIRCUIT	17
H AC IN TERMINAL CIRCUIT	17

- **This schematic diagram may be modified at any time with the development of new technology.**

Notes:
- **S801** : Power "STANDBY ⏻ /ON" switch (POWER, STANDBY ⏻ /ON)
- **S802** : Source direct switch (SOURCE DIRECT)
- **S803** : Vocal presence switch (VOCAL PRESENCE)

- Indicated voltage values are the standard values for the unit measured by the DC electronic circuit tester (high-impedance) with the chassis taken as standard. Therefore, there may exist some errors in the voltage values, depending on the internal impedance of the DC circuit tester.
  No mark: Power ON

- Important safety notice:
  Components identified by ⚠ mark have special characteristics important for safety.
  Furthermore, special parts which have purposes of fire-retardant (resistors), high-quality sound (capacitors), low-noise (resistors), etc. are used. When replacing any of components, be sure to use only manufacturer's specified parts shown in the parts list.

- **Caution!**
  IC and LSI are sensitive to static electricity.
  Secondary trouble can be prevented by taking care during repair.
  Cover the parts boxes made of plastics with aluminum foil.
  Ground the soldering iron.
  Put a conductive mat on the work table.
  Do not touch the legs of IC or LSI with the fingers directly.

- **Voltage and signal line**

: Positive voltage line

: Positive voltage line

: Source signal line (L ch)

A OPERATION CIRCUIT (P.C.Board:on page 18)

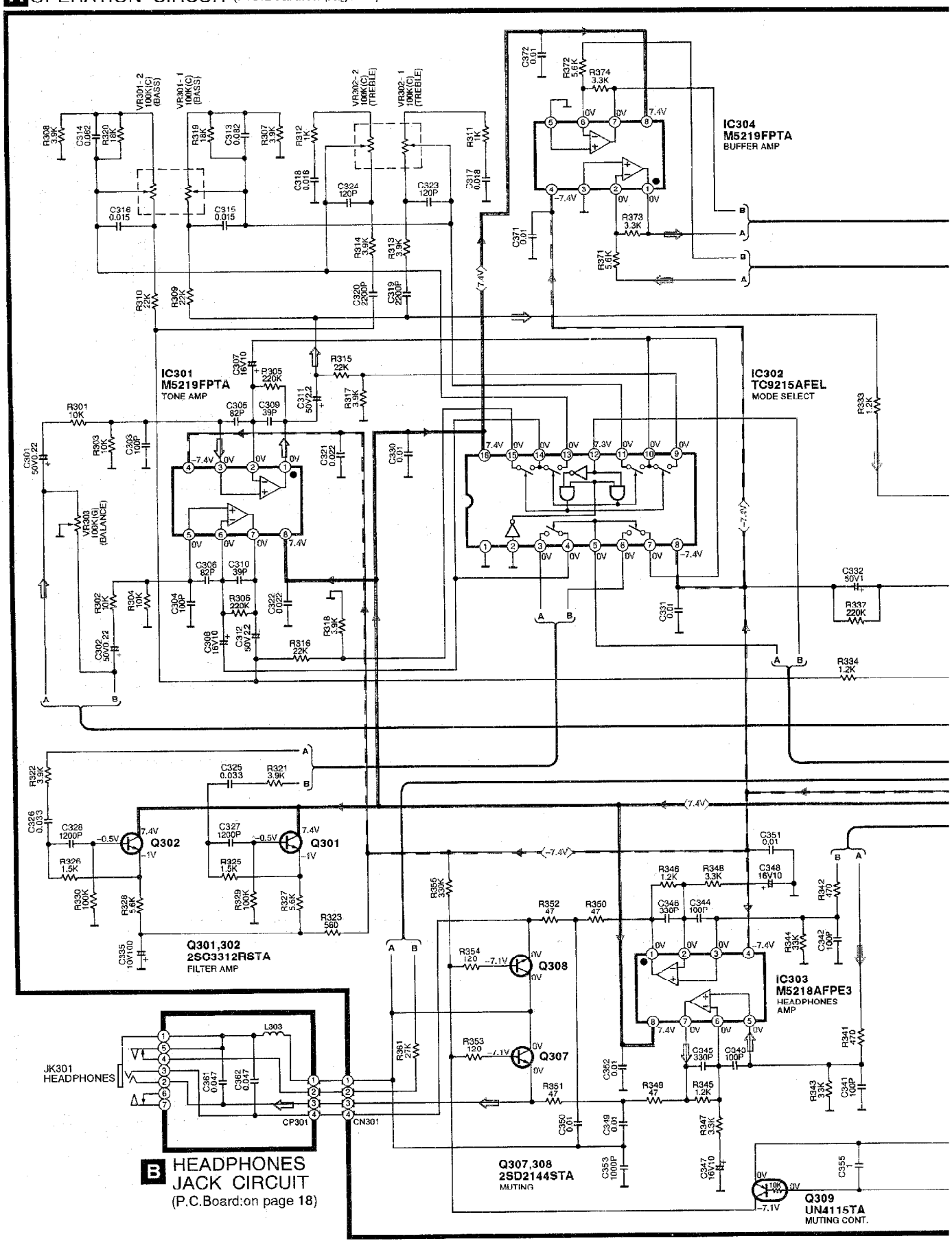

B HEADPHONES JACK CIRCUIT (P.C.Board:on page 18)

C PDM CIRCUIT (P.C.Board:on page 18)

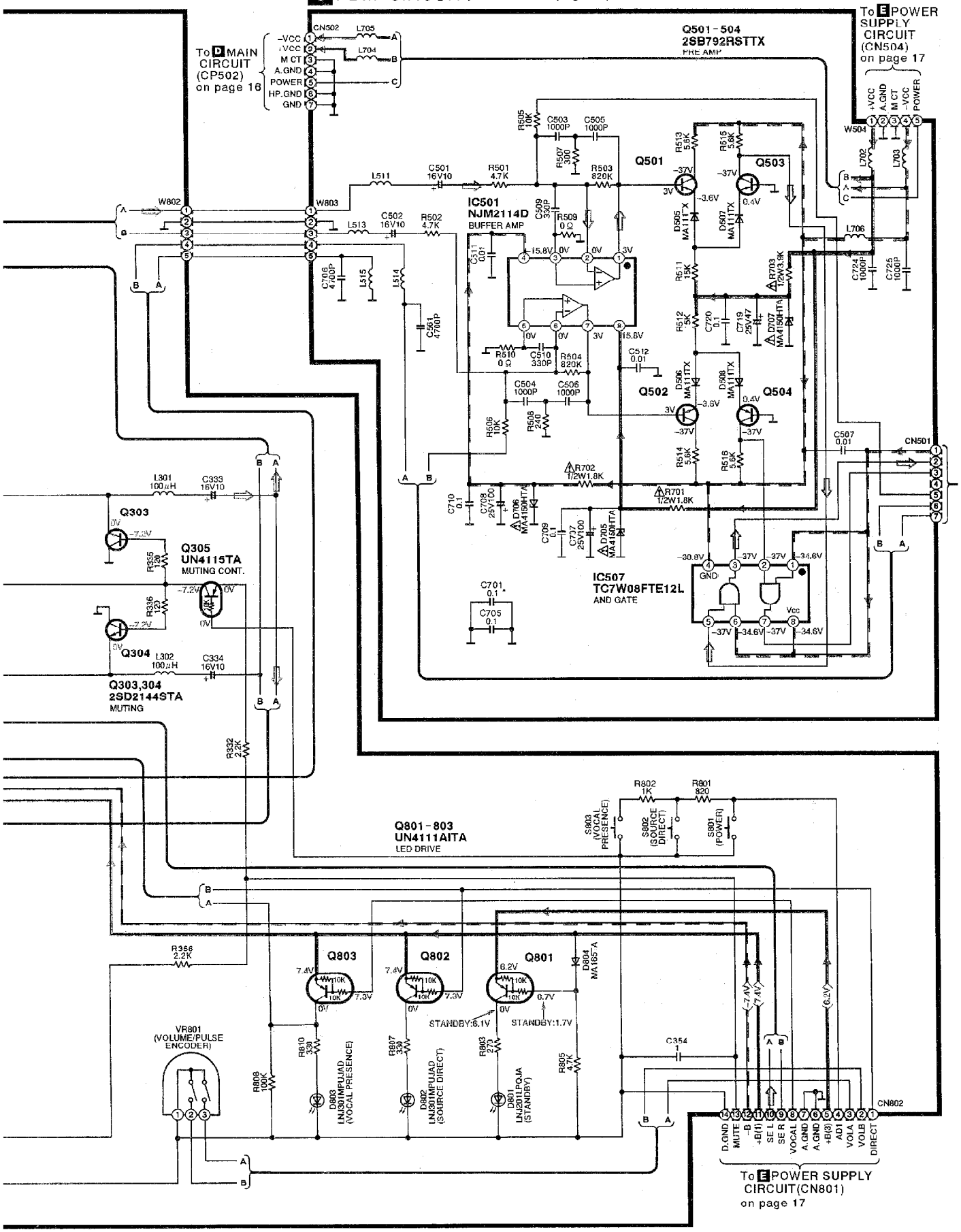

D MAIN CIRCUIT (P.C.Board:on page 19)

: Positive voltage line
: Negative voltage line
: Source signal line (L ch)

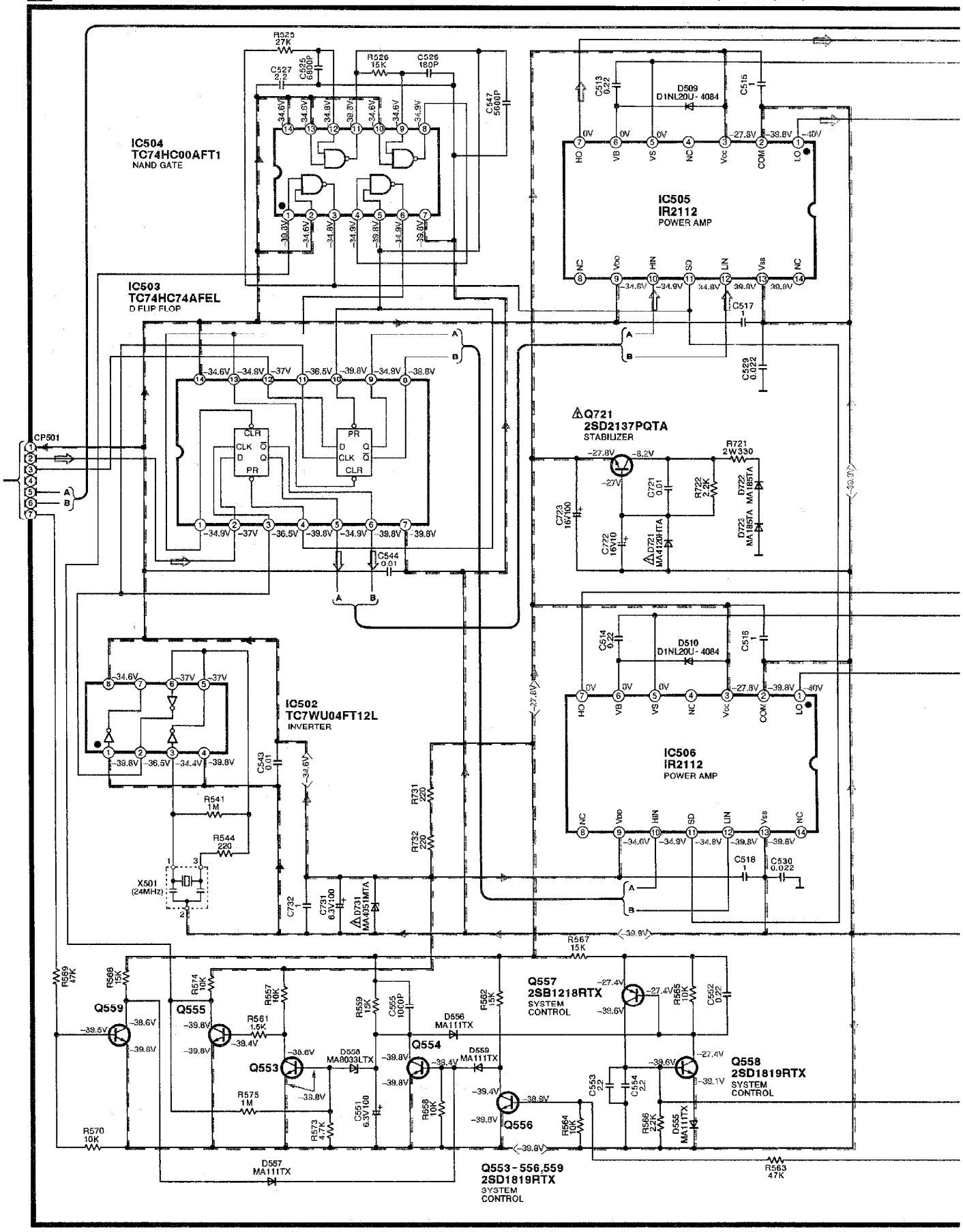

: Positive voltage line : Negative voltage line : Source signal line (L ch)

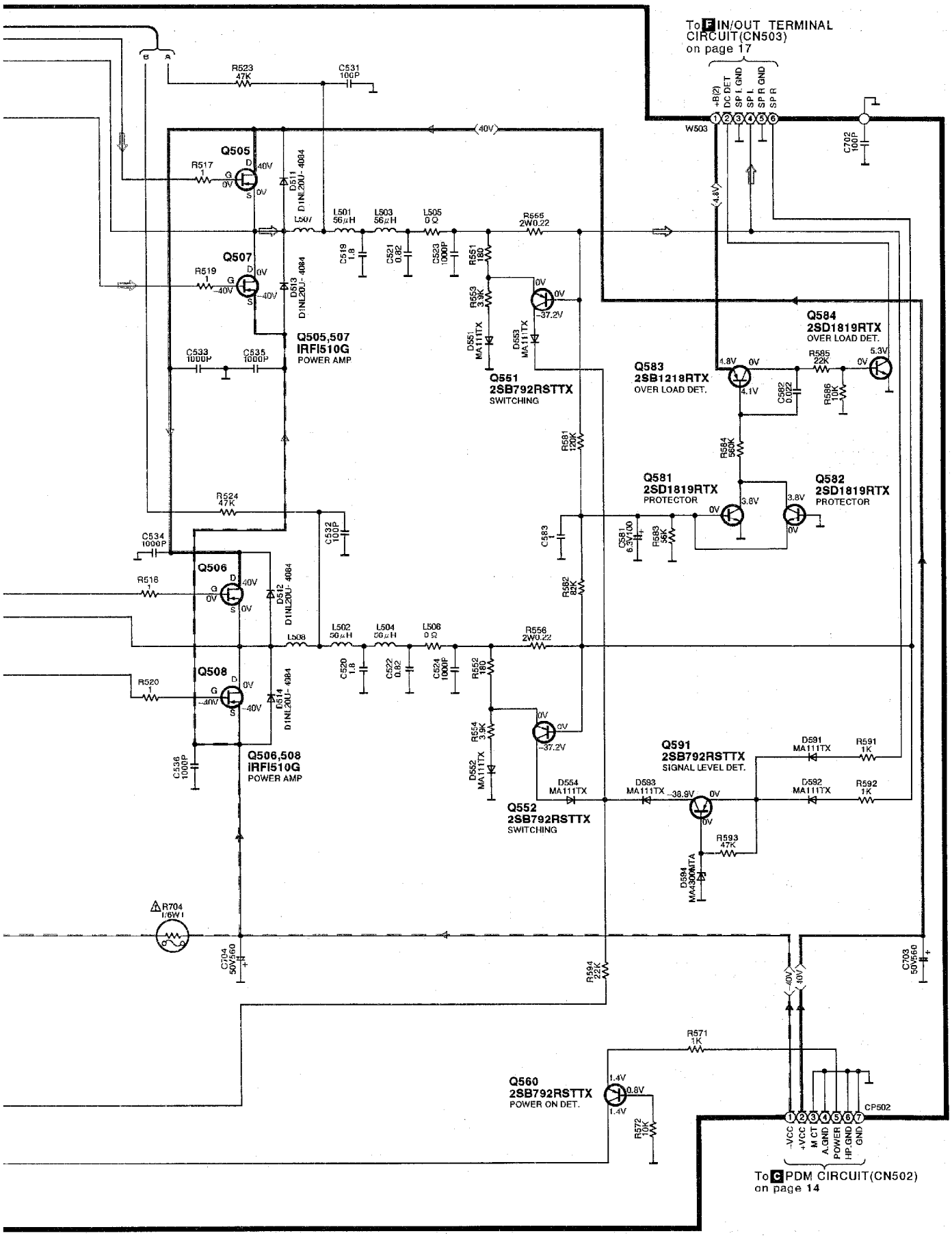

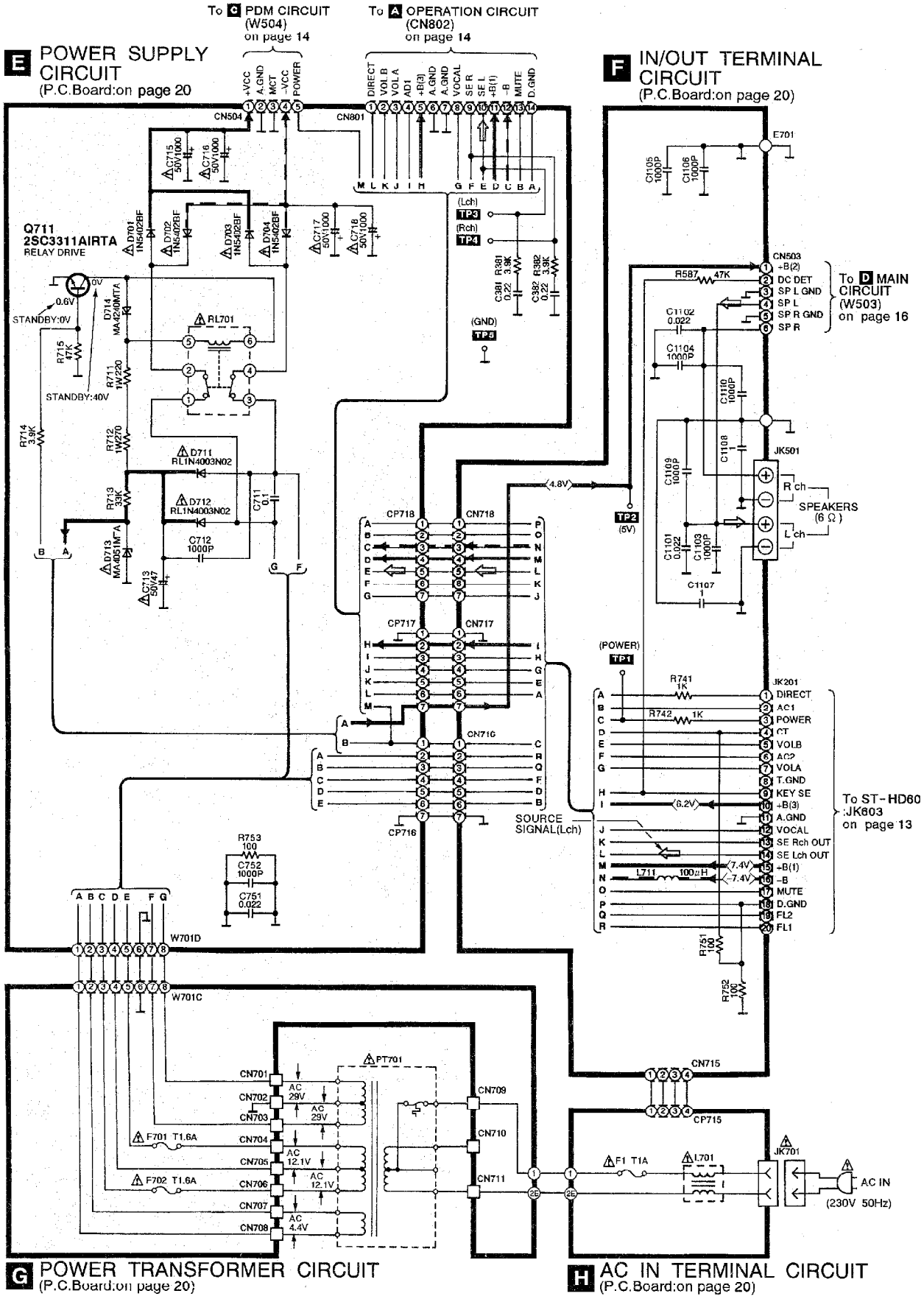
To C PDM CIRCUIT (W504) on page 14
To A OPERATION CIRCUIT (CN802) on page 14
E POWER SUPPLY CIRCUIT (P.C.Board:on page 20
F IN/OUT TERMINAL CIRCUIT (P.C.Board:on page 20)
Q711 2SC3311AIRTA RELAY DRIVE
STANDBY:0V
STANDBY:40V
To D MAIN CIRCUIT (W503) on page 16
To ST-HD60 :JK603 on page 13
SPEAKERS (6 Ω)
SOURCE SIGNAL(Lch)
AC IN (230V 50Hz)
G POWER TRANSFORMER CIRCUIT (P.C.Board:on page 20)
H AC IN TERMINAL CIRCUIT (P.C.Board:on page 20)

Printed Circuit Board Diagram

- This circuit board diagram may be modified at any time with the development of new technology.

A OPERATION P.C.B.

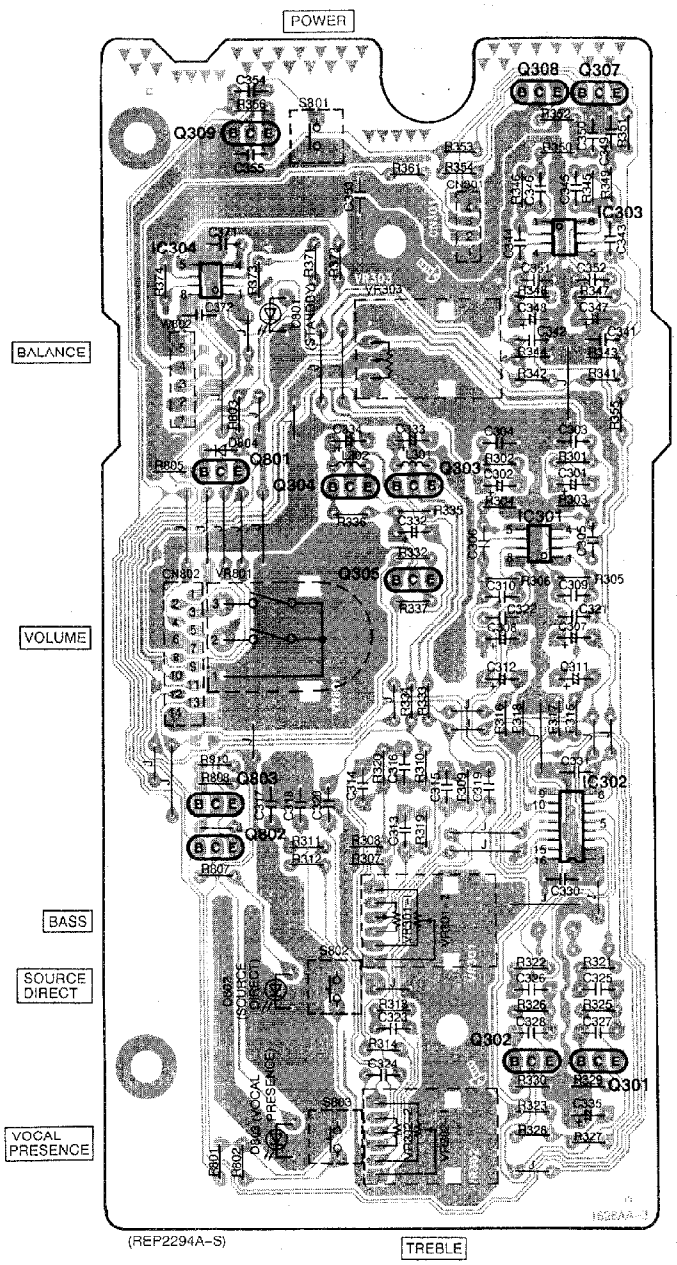

B HEADPHONES JACK P.C.B.

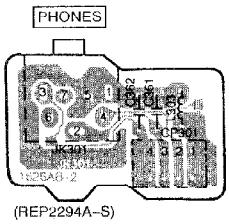

C PDM P.C.B.

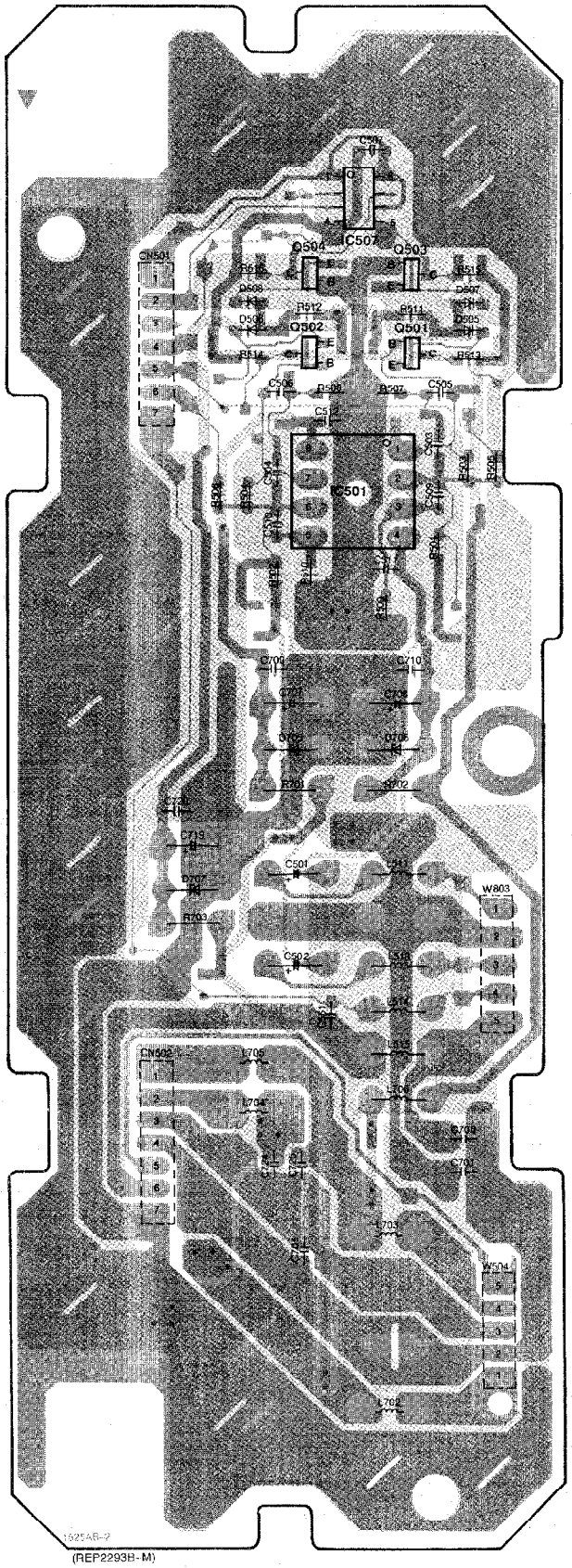

D MAIN P.C.B.

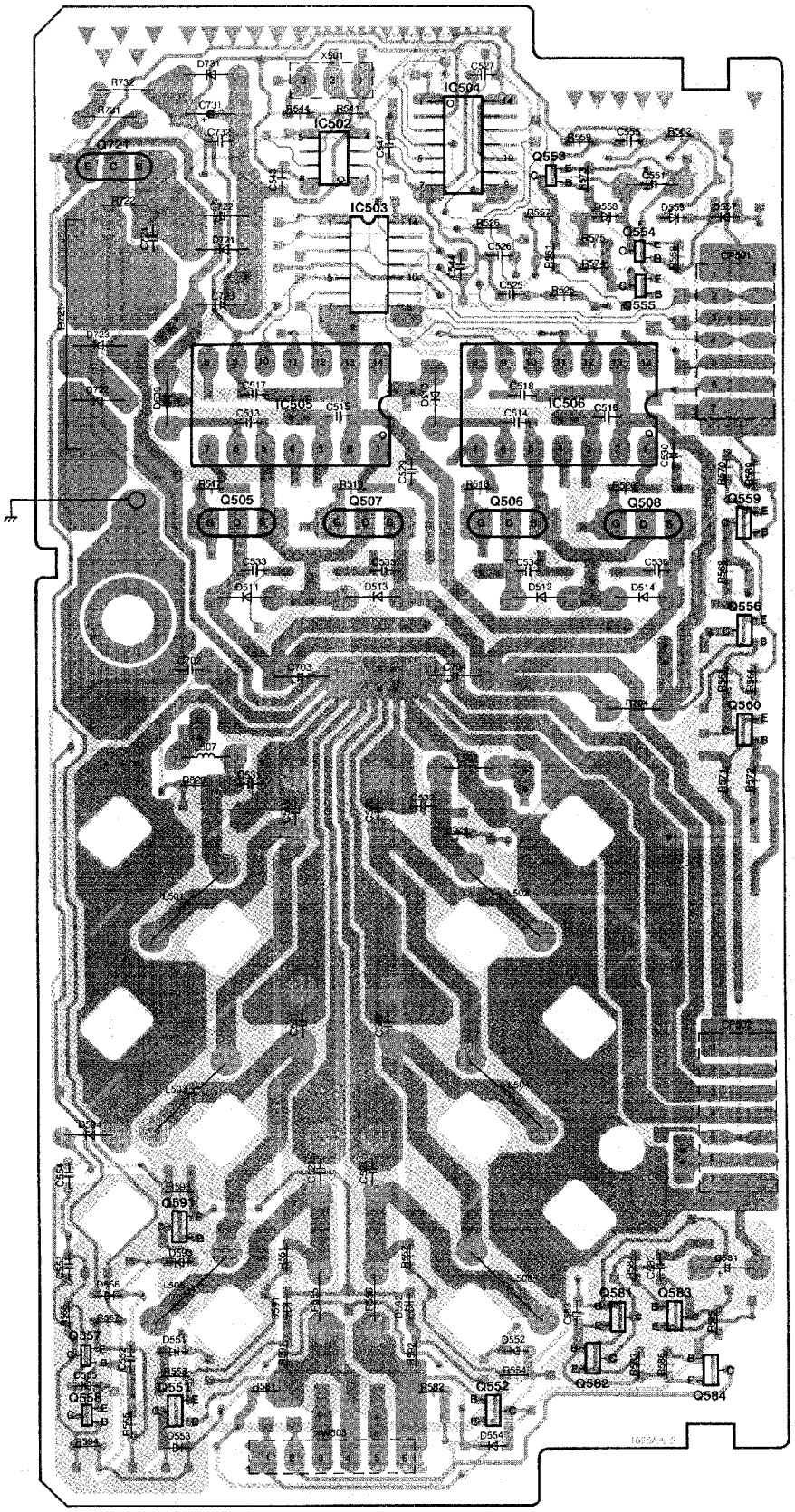

(REF2293B -M)

E POWER SUPPLY P.C.B.

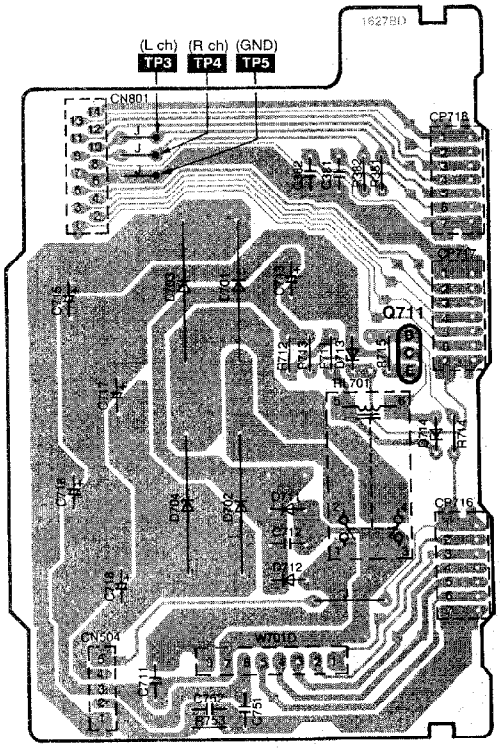

(REP2295B-P)

F IN/OUT TERMINAL P.C.B.

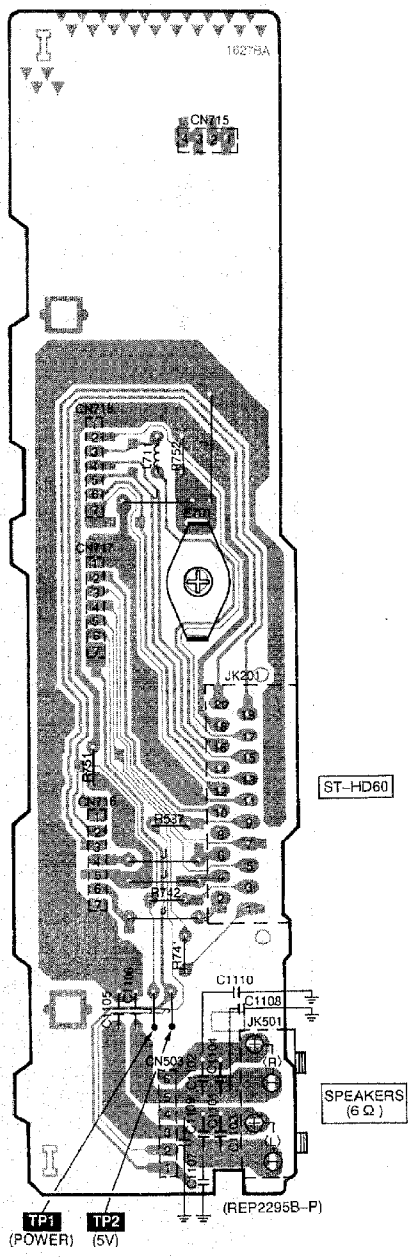

(REP2295B-P)

G POWER TRANSFORMER P.C.B.

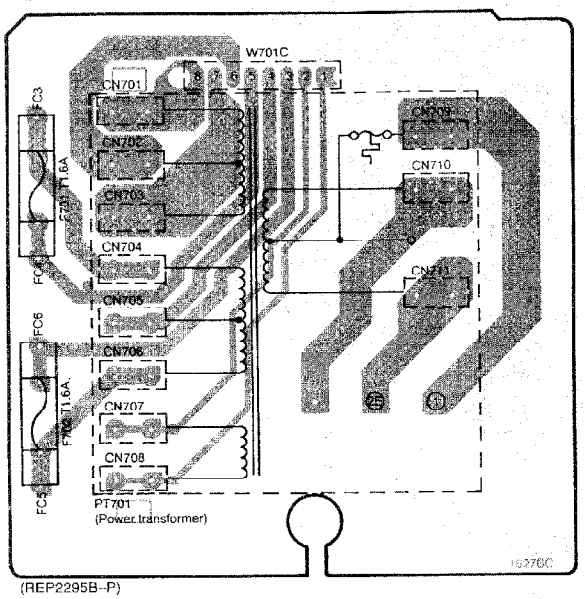

(REP2295B-P)

H AC IN TERMINAL P.C.B.

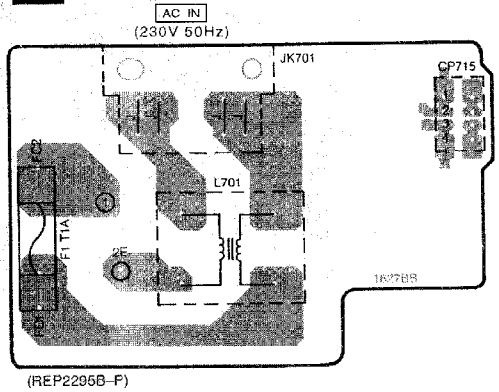

(REP2295B-P)

■ Block Diagram

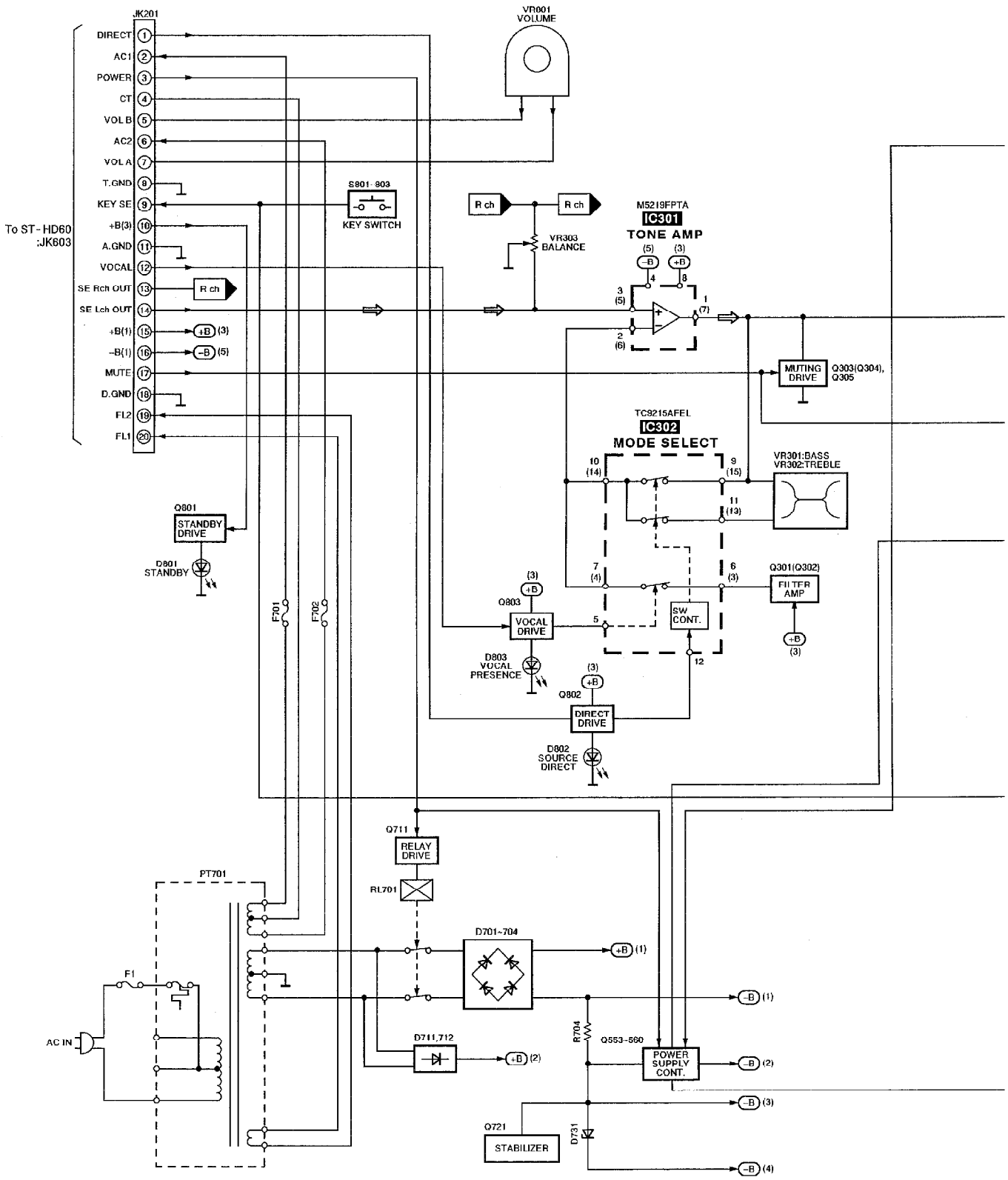

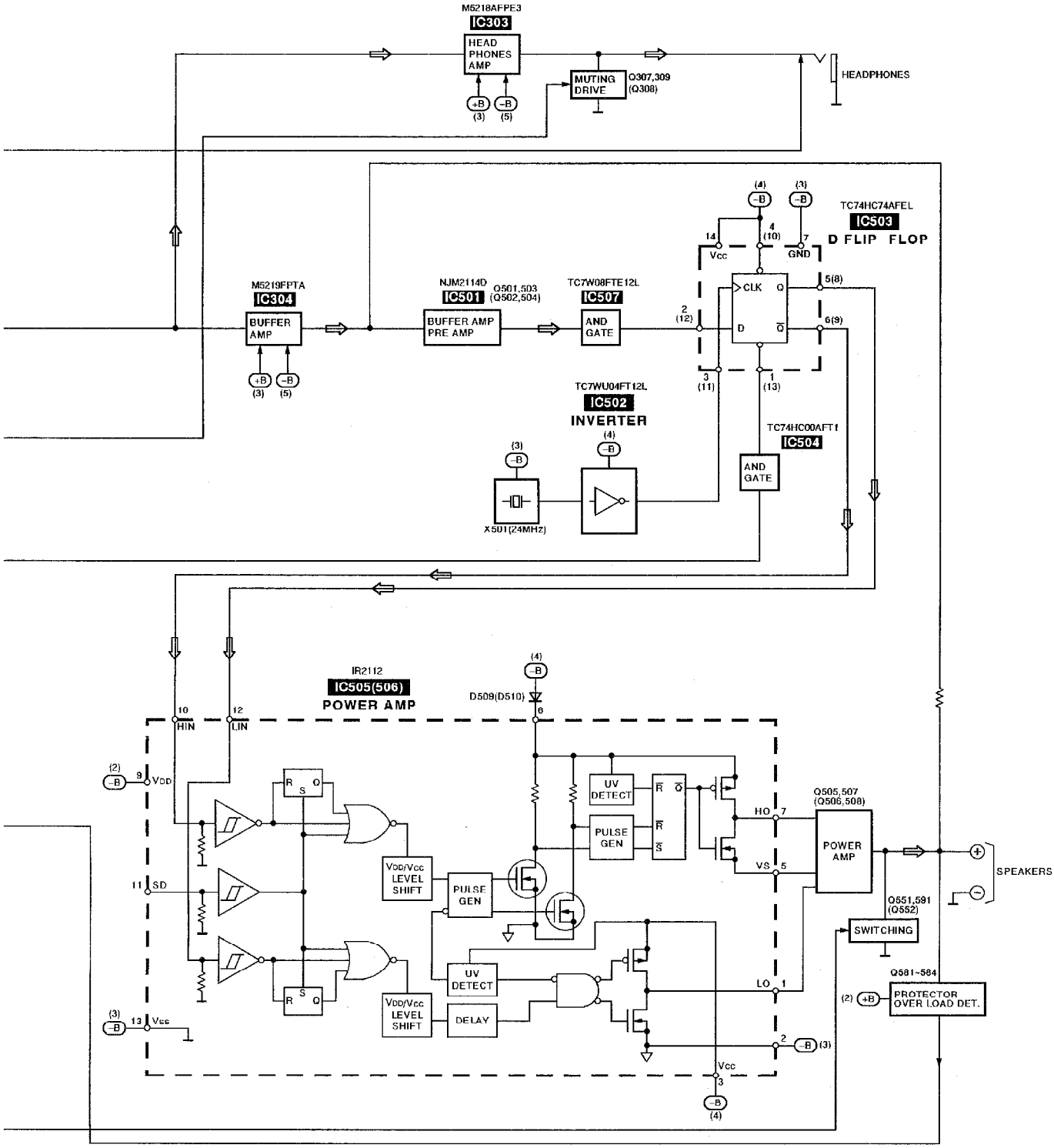

Notes:
1) ⇨ :SOURCE SIGNAL
2) ( )INDICATES PIN NO. OF RIGHT CHANNEL

Replacement Parts List (Electrical)

Notes: *Important safety notice:
Components identified by ⚠ mark have special characteristics important for safety.
Furthermore, special parts which have purposes of fire-retardant (resistors), high-quality sound (capacitors), low-noise (resistors), etc. are used.
When replacing any of components, be sure to use only manufacture's specified parts shown in the parts list.
*The parenthesized indications in the Remarks columns specify the areas. (Refer to the cover page for area.)
Parts without these indications can be used for all areas.
*[M] Indicates in Remarks columns parts that are supplied by MESA.

Ref. No.	Part No.	Part Name & Description	Remarks
		INTEGRATED CIRCUIT(S)	
IC301	M5219FPTA	IC	[M]
IC302	TC9215AFEL	IC	[M]
IC303	M5218AFPE3	IC	[M]
IC304	M5219FPTA	IC	[M]
IC501	NJM2114D	IC	[M]
IC502	TC7WU04FT12L	IC	[M]
IC503	TC74HC74AFEL	IC	[M]
IC504	TC74HC00AFT1	IC	[M]
IC505, 506	IR2112	IC	[M]
IC507	TC7W08FTE12L	IC	[M]
		TRANSISTOR(S)	
Q301, 302	2SC3312RSTA	TRANSISTOR	[M]
Q303, 304	2SD2144S	TRANSISTOR	[M]
Q305	UN4115	TRANSISTOR	[M]
Q307, 308	2SD2144S	TRANSISTOR	[M]
Q309	UN4115	TRANSISTOR	[M]
Q501-504	2SB792RSTTX	TRANSISTOR	[M]
Q505-508	IRFI510G	TRANSISTOR	[M]
Q551, 552	2SB792RSTTX	TRANSISTOR	[M]
Q553-556	2SD1819RTX	TRANSISTOR	[M]
Q557	2SB1218RTX	TRANSISTOR	[M]
Q558, 559	2SD1819RTX	TRANSISTOR	[M]
Q560	2SB792RSTTX	TRANSISTOR	[M]
Q581, 582	2SD1819RTX	TRANSISTOR	[M]
Q583	2SB1218RTX	TRANSISTOR	[M]
Q584	2SD1819RTX	TRANSISTOR	[M]
Q591	2SB792RSTTX	TRANSISTOR	[M]
Q711	2SC3311AIRTA	TRANSISTOR	[M]
Q721⚠	2SD2137PQTA	TRANSISTOR	[M]
Q801-803	UN4111	TRANSISTOR	[M]
		DIODE(S)	
D505-508	MA111TX	DIODE	[M]
D509-514	D1NL20U-4084	DIODE	[M]
D551-557	MA111TX	DIODE	[M]
D558	MA8033LTX	DIODE	[M]
D559	MA111TX	DIODE	[M]
D591-593	MA111TX	DIODE	[M]
D594	MA4300M	DIODE	[M]
D701-704⚠	1N5402BF	DIODE	[M]

Ref. No.	Part No.	Part Name & Description	Remarks
D705-707⚠	MA4150M	DIODE	[M]
D711, 712⚠	RL1N4003N02	DIODE	[M]
D713⚠	MA4051MTA	DIODE	[M]
D714	MA4240H	DIODE	[M]
D721⚠	MA4120HTA	DIODE	[M]
D722, 723	MA185TA	DIODE	[M]
D731⚠	MA4051MTA	DIODE	[M]
D801	LNJ201LPQJA	LED	[M]
D802, 803	LNJ301MPUJAD	LED	[M]
D804	MA165	DIODE	[M]
		VARIABLE RESISTOR(S)	
VR301, 302	EVJYA1F04C15	V. R	[M]
VR303	EVJ02QF04G15	V. R	[M]
VR801	EVQWQAF2524B	V. R	[M]
		COIL(S)	
L301, 302	ELEXT101KA9	COIL	[M]
L303	RLL5000050T-Y	COIL	[M]
L501	RLQT560K	COIL	[M]
L502	RLQT560K1	COIL	[M]
L503	RLQT560K	COIL	[M]
L504	RLQT560K1	COIL	[M]
L505, 506	ERD25V0R00T	CHIP JUMPER	[M]
L507, 508	BL02RN1R62T2	COIL	[M]
L511	BL02RN2R62T4	COIL	[M]
L513-515	BL02RN2R62T4	COIL	[M]
L701⚠	RLQZ271M	COIL	[M]
L702-706	BL02RN2R62T4	COIL	[M]
L711	ELEXT101KA9	COIL	[M]
		OSCILLATOR(S)	
X501	EFOEC2405T4	OSCILLATOR	[M]
		FUSE(S)	
F1⚠	XBA2C10TB0	FUSE	[M]
F701, 702⚠	XBA2C16TB0	FUSE	[M]
		SWITCH(ES)	
S801-803	EVQ21405R	SW	[M]

Ref. No.	Part No.	Part Name & Description	Remarks
		CONNECTOR(S)	
CN301	RJT057W004-1	CONNECTOR(4P)	[M]
CN501, 502	RJT057W007-1	CONNECTOR(7P)	[M]
CN503	RJS1A6606	CONNECTOR(6P)	[M]
CN504	RJS5T7ZA	CONNECTOR(5P)	[M]
CN701-711	RJS1A1101T1	CONNECTOR(1P)	[M]
CN715	RJT057W004-1	CONNECTOR(4P)	[M]
CN716-718	RJT057W007-1	CONNECTOR(7P)	[M]
CN801, 802	RJS1A6714	CONNECTOR(14P)	[M]
CP301	RJU057W004	CONNECTOR(4P)	[M]
CP501, 502	RJU057W007	CONNECTOR(7P)	[M]
CP715	RJU057W004	CONNECTOR(4P)	[M]
CP716-718	RJU057W007	CONNECTOR(7P)	[M]
		GND PLATE	
E701	SNE1004-2	GND PLATE	[M]
		FUSE HOLDER	
FC1-6	EYF52BC	FUSE HOLDER	[M]
		POWER TRANSFORMER(S)	
PT701⚠	RTP2M5B011	POWER TRANSFORMER	[M]
		RELAY(S)	
RL701⚠	RSY0013M-0	RELAY	[M]
		JACK(S)	
JK201	RJT065K20	SYSTEM	[M]
JK301	RJJ37TN01-C	HEADPHONES	[M]
JK501	RJR0054	JACK	[M]
JK701⚠	SJS9236	AC IN	[M]

■ Resistors and Capacitors

Notes: *Capacity values are in microfarads (μF) unless specified otherwise, P = Pico-farads (pF) F = Farads (F)
*Resistance values are in ohms, unless specified otherwise, 1K = 1,000 (OHM) 1M = 1,000k (OHM)
*[M] Indicates in Remarks columns parts that are supplied by MESA.

Ref. No.	Part No.	Values & Remarks
		RESISTORS
R301-304	ERDS2TJ103	1/4W 10K [M]
R305, 306	ERDS2TJ224T	1/4W 220K [M]
R307, 308	ERDS2TJ392T	1/4W 3.9K [M]
R309, 310	ERDS2TJ223	1/4W 22K [M]
R311, 312	ERDS2TJ102	1/4W 1K [M]
R313, 314	ERDS2TJ392T	1/4W 3.9K [M]
R315, 316	ERDS2TJ223	1/4W 22K [M]
R317, 318	ERDS2TJ392T	1/4W 3.9K [M]
R319, 320	ERDS2TJ183T	1/4W 18K [M]
R321, 322	ERDS2TJ392T	1/4W 3.9K [M]
R323	ERDS2TJ561	1/4W 560 [M]
R325, 326	ERDS2TJ152	1/4W 1.5K [M]
R327, 328	ERDS2TJ562	1/4W 5.6K [M]
R329, 330	ERDS2TJ104	1/4W 100K [M]
R332	ERDS2TJ222	1/4W 2.2K [M]
R333, 334	ERDS2TJ122	1/4W 1.2K [M]
R335, 336	ERDS2EJ121	1/4W 120 [M]
R337	ERDS2TJ224T	1/4W 220K [M]
R341, 342	ERDS2TJ471	1/4W 470 [M]
R343, 344	ERDS2TJ333	1/4W 33K [M]
R345, 346	ERDS2TJ122	1/4W 1.2K [M]
R347, 348	ERDS2TJ332	1/4W 3.3K [M]
R349-352	ERDS2TJ470	1/4W 47 [M]
R353, 354	ERDS2EJ121	1/4W 120 [M]
R355	ERDS2TJ334	1/4W 330K [M]
R356	ERDS2TJ222	1/4W 2.2K [M]
R361	ERDS2TJ273	1/4W 27K [M]
R371, 372	ERDS2TJ562	1/4W 5.6K [M]
R373, 374	ERDS2TJ332	1/4W 3.3K [M]
R381, 382	ERDS2TJ392T	1/4W 3.9K [M]
R501, 502	ERJ6GEYJ472V	1/10W 4.7K [M]
R503, 504	ERJ6GEYJ824V	1/10W 820K [M]
R505, 506	ERJ6GEYJ103V	1/10W 10K [M]
R507	ERJ6GEYJ301V	1/10W 300 [M]
R508	ERJ6GEYJ241V	1/10W 240 [M]
R509, 510	ERJ6GEY0R00V	1/10W 0.00 [M]
R511, 512	ERJ6GEYJ153V	1/10W 15K [M]
R513-516	ERJ6GEYJ562V	1/10W 5.6K [M]
R517-520	ERJ6GEYJ1R0V	1/10W 1.0 [M]
R523, 524	ERJ6GEYJ473V	1/10W 47K [M]
R525	ERJ6GEYJ273V	1/10W 27K [M]
R526	ERJ6GEYJ153V	1/10W 15K [M]
R541	ERJ6GEYJ105	1/10W 1M [M]
R544	ERJ6GEYJ221V	1/10W 220 [M]
R551, 552	ERJ6GEYJ181V	1/10W 180 [M]
R553, 554	ERJ6GEYJ392V	1/10W 3.9K [M]

Ref. No.	Part No.	Values & Remarks
R555, 556	ERF2EXKR22V	2W 0.22 [M]
R557, 558	ERJ6GEYJ103V	1/10W 10K [M]
R559	ERJ6GEYJ153V	1/10W 15K [M]
R561	ERJ6GEYJ152V	1/10W 1.5K [M]
R562	ERJ6GEYJ153V	1/10W 15K [M]
R563	ERJ6GEYJ473V	1/10W 47K [M]
R564, 565	ERJ6GEYJ103V	1/10W 10K [M]
R566	ERJ6GEYJ222V	1/10W 2.2K [M]
R567, 568	ERJ6GEYJ153V	1/10W 15K [M]
R569	ERJ6GEYJ473V	1/10W 47K [M]
R570	ERJ6GEYJ103V	1/10W 10K [M]
R571	ERJ6GEYJ102V	1/10W 1K [M]
R572	ERJ6GEYJ103V	1/10W 10K [M]
R573	ERJ6GEYJ472V	1/10W 4.7K [M]
R574	ERJ6GEYJ103V	1/10W 10K [M]
R575	ERJ6GEYJ105	1/10W 1M [M]
R581	ERJ6GEYJ124V	1/10W 120K [M]
R582	ERJ6GEYJ823	1/10W 82K [M]
R583	ERJ6GEYJ563V	1/10W 56K [M]
R584	ERJ6GEYJ564V	1/10W 560K [M]
R585	ERJ6GEYJ223V	1/10W 22K [M]
R586	ERJ6GEYJ103V	1/10W 10K [M]
R587	ERDS2TJ473	1/4W 47K [M]
R591, 592	ERJ6GEYJ102V	1/10W 1K [M]
R593	ERJ6GEYJ473V	1/10W 47K [M]
R594	ERJ6GEYJ223V	1/10W 22K [M]
R701, 702⚠	ERDS1FJ182	1/2W 1.8K [M]
R703⚠	ERDS1FJ392	1/2W 3.9K [M]
R704⚠	ERQ16NKW1R0E	1W 1.0 [M]
R711⚠	ERG1SJ221	1/6W 220 [M]
R712	ERG1SJ271	1W 270 [M]
R713	ERDS2TJ333	1/4W 33K [M]
R714	ERDS2TJ392T	1/4W 3.9K [M]
R715	ERDS2TJ473	1/4W 47K [M]
R721	ERG2ANJP331S	2W 330 [M]
R722	ERDS2TJ222	1/4W 2.2K [M]
R731, 732	ERDS2TJ221	1/4W 220 [M]
R741, 742	ERDS2TJ102	1/4W 1K [M]
R751-753	ERDS2TJ101	1/4W 100 [M]
R801	ERDS2TJ821	1/4W 820 [M]
R802	ERDS2TJ102	1/4W 1K [M]
R803	ERDS2TJ271	1/4W 270 [M]
R805	ERDS2TJ472	1/4W 4.7K [M]
R807	ERDS2TJ331	1/4W 330 [M]
R808	ERDS2TJ104	1/4W 100K [M]
R810	ERDS2TJ331	1/4W 330 [M]
		CAPACITORS

Ref. No.	Part No.	Values & Remarks
C301, 302	ECEA1HKAR22B	50V 0.22 [M]
C303, 304	ECBT1H101KB5	50V 100P [M]
C305, 306	ECBT1H820KB5	50V 82P [M]
C307, 308	RCE1CKA100BG	16V 10U [M]
C309, 310	ECBT1H390J5	50V 39P [M]
C311, 312	ECEA1HKA2R2B	50V 2.2U [M]
C313, 314	ECQV1H823JM3	50V 0.082U [M]
C315, 316	ECQB1H153JF3	50V 0.015U [M]
C317, 318	ECQB1H183JF3	50V 0.018U [M]
C319, 320	ECQB1H222JF3	50V 2200P [M]
C321, 322	ECBT1E223ZF	25V 0.022U [M]
C323, 324	ECBT1H121KB5	50V 120P [M]
C325, 326	ECQV1H333JM3	50V 0.033U [M]
C327, 328	ECQB1H122JF3	50V 1200P [M]
C330, 331	ECBT1E103ZF	25V 0.01U [M]
C332	ECEA1HKA010B	50V 1U [M]
C333, 334	RCE1CKA100BG	16V 10U [M]
C335	RCE1AKA101BG	10V 100U [M]
C341-344	ECBT1H101KB5	50V 100P [M]
C345, 346	ECBT1H331KB5	50V 330P [M]
C347, 348	RCE1CKA100BG	16V 10U [M]
C349-352	ECBT1E103ZF	25V 0.01U [M]
C353	ECBT1H102KB5	50V 1000P [M]
C354, 355	ECBT1C105ZF5	16V 1U [M]
C361, 362	ECBT1H473ZF5	50V 0.047U [M]
C371, 372	ECBT1E103ZF	25V 0.01U [M]
C381, 382	ECQV1H224JM3	50V 0.22U [M]
C501, 502	RCE1CKA100BG	16V 10U [M]
C503-506	ECUV1H102KBN	50V 1000P [M]
C507	ECUV1E103ZFN	25V 0.01U [M]
C509, 510	ECUV1H331KBN	50V 330P [M]
C511, 512	ECUV1E103ZFN	25V 0.01U [M]
C513, 514	ECUV1E224ZFN	25V 0.22U [M]
C515-518	ECUVNC105ZFN	16V 1U [M]
C519, 520	ECQV1H185JL3	50V 1.8U [M]
C521, 522	ECQV1H824JM3	50V 0.82U [M]
C523, 524	ECKT1H102KB	50V 1000P [M]
C525	ECUV1H682KBN	50V 6800P [M]
C526	ECUV1H181KCN	50V 180P [M]
C527	ECUVNC225ZFN	16V 2.2U [M]
C529, 530	ECUV1H223ZFN	50V 0.022U [M]
C531, 532	ECUV2H101JCM	500V 100P [M]
C533-536	ECUV1H102KBN	50V 1000P [M]
C543, 544	ECUV1E103ZFN	25V 0.01U [M]
C547	ECUV1H562KBN	50V 5600P [M]
C551	ECEA0JKA101B	6.3V 100U [M]
C552	ECUV1E224ZFN	25V 0.22U [M]
C553, 554	ECUVNC225ZFN	16V 2.2U [M]
C555	ECUV1H102KBN	50V 1000P [M]

Ref. No.	Part No.	Values & Remarks
C561	ECUV1H472KBN	50V 4700P [M]
C581	ECEA0JKA101B	6.3V 100U [M]
C582	ECUV1E223ZFN	25V 0.022U [M]
C583	ECUVNC105ZFN	16V 1U [M]
C701	ECUV1E104ZFN	25V 0.1U [M]
C702	ECUV1H101KCN	50V 100P [M]
C703, 704	EEUFA1H561E	50V 560U [M]
C705	ECUV1E104ZFN	25V 0.1U [M]
C706	ECUV1H472KBN	50V 4700P [M]
C707, 708	ECA1EM101B	25V 100U [M]
C709, 710	ECUV1E104ZFN	25V 0.1U [M]
C711	ECQE1104KF3	100V 0.1U [M]
C712	ECKR2H102ZF5	500V 1000P [M]
C713⚠	ECA1HM470B	50V 47U [M]
C715⚠	ECA1HM102E	50V 1000U [M]
C716⚠	ECA1HM102B	50V 1000U [M]
C717⚠	ECA1HM102E	50V 1000U [M]
C718⚠	ECA1HM102B	50V 1000U [M]
C719	ECEA1EKA470B	25V 47U [M]
C720	ECUV1E104ZFN	25V 0.1U [M]
C721	ECUV1E103ZFN	25V 0.01U [M]
C722	RCE1CKA100BG	16V 10U [M]
C723	ECEA1CKA101B	16V 100U [M]
C724, 725	ECUV1H102KBN	50V 1000P [M]
C731	ECEA0JKA101B	6.3V 100U [M]
C732	ECUVNC105ZFN	16V 1U [M]
C751	ECBT1E223ZF	25V 0.022U [M]
C752	ECBT1H102KB5	50V 1000P [M]
C1101, 1102	ECBT1E223ZF	25V 0.022U [M]
C1103-1106	ECBT1H102KB5	50V 1000P [M]
C1107, 1108	ECBT1C105ZF5	16V 1U [M]
C1109, 1110	ECBT1H102KB5	50V 1000P [M]

■ Replacement Parts List (Cabinet, Packing and Accessories)

Ref. No.	Part No.	Part Name & Description	Remarks
		CABINET PARTS	
1	RKM0326A-S	CABINET	[M]
2	RHD30073-K	SCREW	[M]
3	XTBS3+10JFZ1	SCREW	[M]
4	RFKGEHD60E-N	FRONT PANEL ASS'Y	[M]
5	RGW0247-S1	KNOB, VOLUME	[M]
6	RKA0076-N	FOOT	[M]
7	RMF0236	SHEET	[M]
8	RMN0191	P. C. B HOLDER	[M]
9	RLBT4001-D	FERRITE CORE	[M]
10	RMN0203	P. C. B HOLDER	[M]
11	RGK0810-N	ORNAMENT	[M]
12	RGK0811-N	ORNAMENT	[M]
13	RGK0815-N	VOLUME ORNAMENT	[M]
14	RGU1392-S	BUTTON, POWER	[M]
15	RGW0198-S	KNOB, TONE	[M]
16	RHD26016	SCREW	[M]
17	SNE4021-1	NUT	[M]
18	XTBS26+8J	SCREW	[M]
19	XTBS3+8JFZ1	SCREW	[M]
20	XTB3+16JFZ	SCREW	[M]
21	SHE185-2	PCB SUPPORT	[M]
22	RMR0985-K	EDGE HOLDER	[M]
23	RLB0010	FERRITE CORE	[M]
24	XTB3+6JFZ	SCREW	[M]
25	XTB3+6G	SCREW	[M]
26	RGK0808-M	ORNAMENT	[M]
27	RGK0809-M	ORNAMENT	[M]
28	RFKEEHD7-N	WIRE ASS'Y	[M]
29	RWJ1806380QQ	FLAT CABLE(W503/6P)	[M]
30	RWJ5705300KX	FLAT CABLE(W504, 803/5P)	[M]
31	REZ0902	WIRE ASS'Y(W802/5P)	[M]
32	REZ0900	FLAT CABLE(CN801, 802/14P)	[M]
33	RGU1393-Q	BUTTON, OPERATION	[M]
34	RWJ1808165KK	FLAT CABLE(W701C, D/8P)	[M]
35	RGR0241A-Q	REAR PANEL	[M]
36	RMK0323-2	CHASSIS	[M]
37	RGL0333-1Q	PANEL LIGHT	[M]
38	RMZ0397	BARRIER	[M]
39	RLBT3101-D	FERRITE CORE	[M]
		PACKING MATERIALS	
P1	RPG3434	GIFT BOX(SE)	[M]
P1	RPG3435	GIFT BOX(ST)	[M]
P1	RPG3404	GIFT BOX(SL)	[M]
P1	RPG3174	GIFT BOX(RS)	[M]
P2	RPQ0731	PAD(ACCESSORY)	[M]
P3	RPN0970	PAD(SE)	[M]
P3	RPN0971	PAD(ST/SL)	[M]
P3	RPN1008	PAD(RS)	[M]
P4	SPP740	SHEET	[M]
P5	RPF0139	POLYETHYLENE COVER	[M]
		ACCESSORIES	
A1	RAK-CH193WH	REMOTE CONTROL	[M]
A1-1	RKK0057-K	BATTERY COVER	[M]
A2	RFA0737-R	SPEAKER CORD UNIT	[M]
A3	REX0608	FLAT CABLE(20P)	[M]
A4	REX0812	FLAT CABLE(19P)	[M]
A5	REX0813	FLAT CABLE(15P)	[M]
A6⚠	RJA0019-2K	AC POWER SUPPLY CORD	[M]
A7	RQA0117	WARRANTY CARD	[M]
A8	RQCB0169	SERVICENTER LIST	[M]
A9	RQT3840-E	INSTRUCTION MANUAL	[M](E)<IA>
A9	RQT3841-D	INSTRUCTION MANUAL	[M](EG)<IB>
A9	RQT3862-H	INSTRUCTION MANUAL	[M](EG)<IC>
A10	RSA0007	FM INDOOR ANTENNA	[M]
A11	RSA0021	AM LOOP ANTENNA	[M]

Note : The "< IA >, < IB >, < IC >" mark in Remarks indicate language of instruction manual.

< IA > : French, Spanish, Swedish
< IB > : German, Italian, French
< IC > : Dutch, Danish

■ Cabinet Parts Location

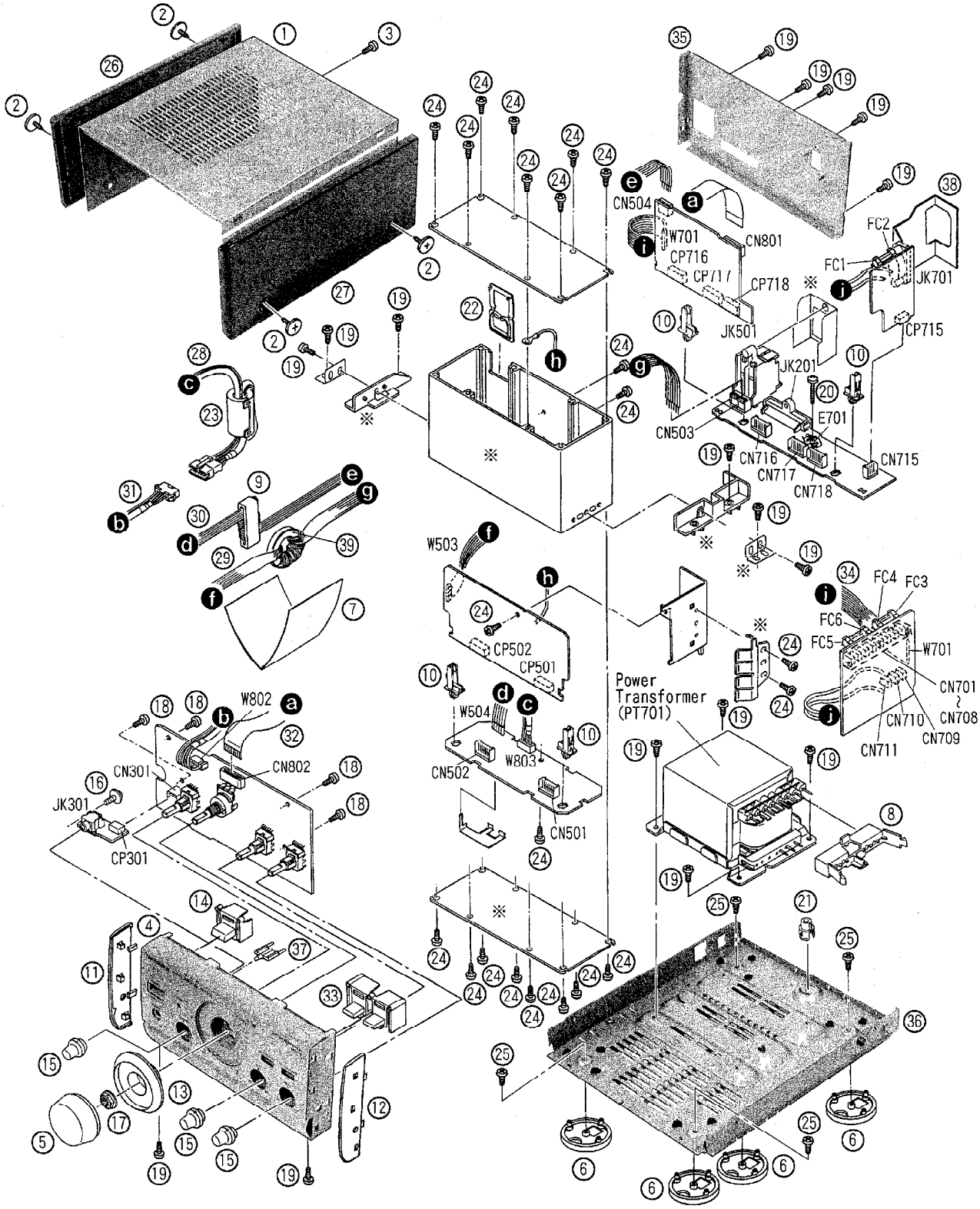

The parts marked in "※" are not supplied.

■ Packaging

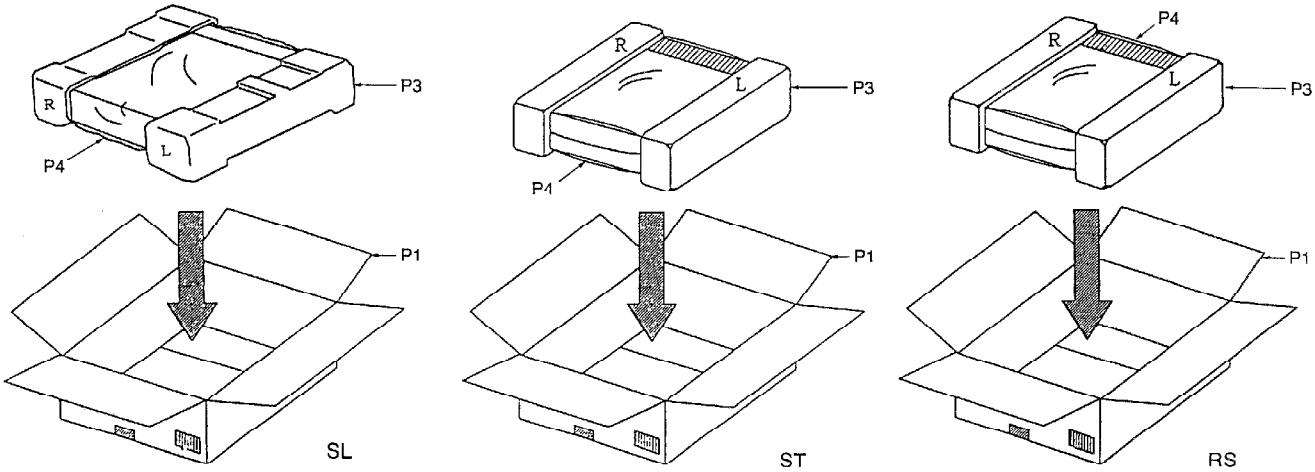

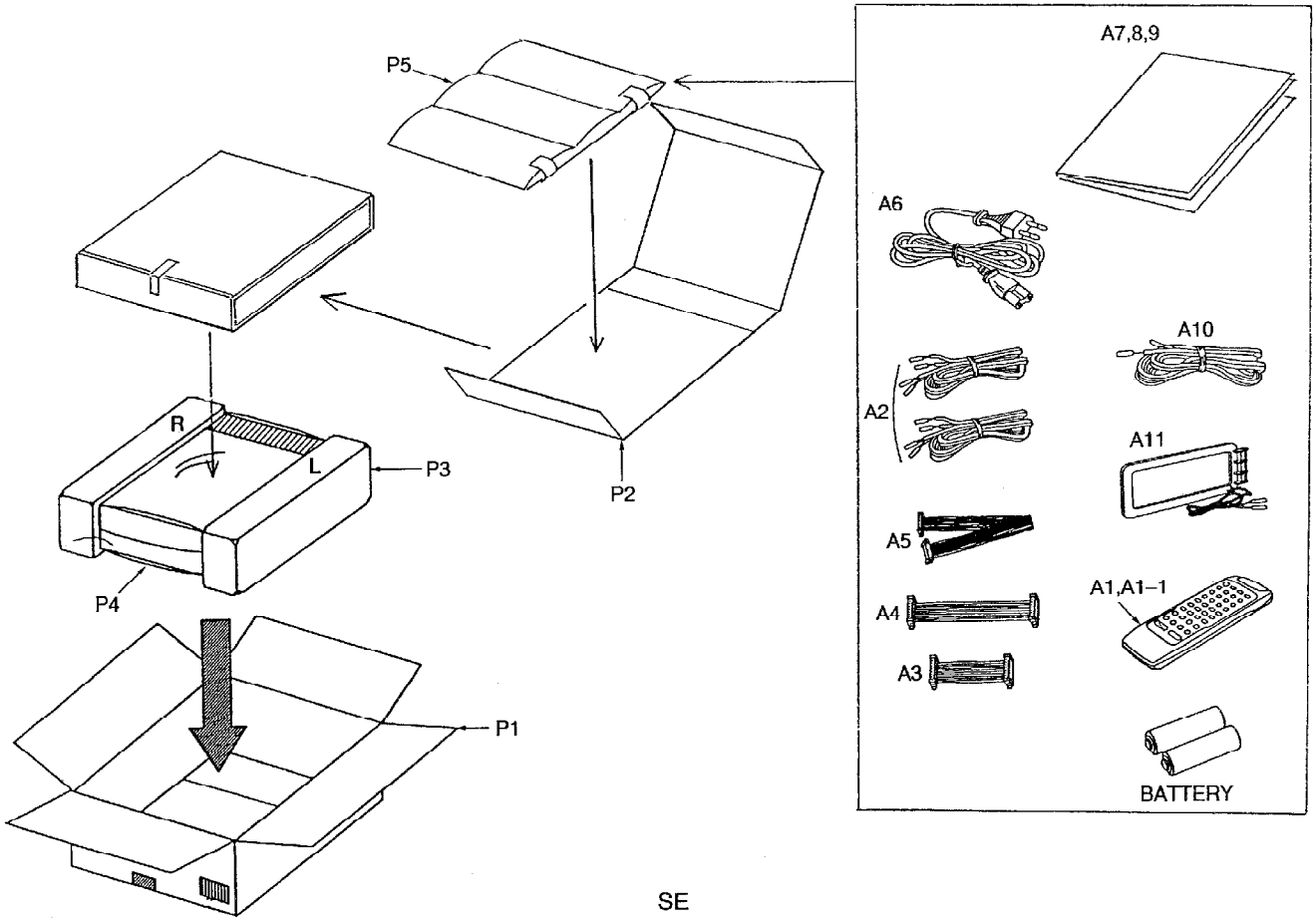

Printed in Japan
F970207500KH/HY